chanhvinh.com

Lovato electric
ENERGY AND AUTOMATION

LREP00

MODBUS-RTU PROTOCOL COMMUNICATION UNIT



Product designation			Micro PLC expansion module, RS485 Modbus RTU communication port
Product type designation			LREP00
Auxiliary supply voltage			24VDC
Power supply			
Rated auxil. supply voltage			24VDC
Operating voltage range			20.4…28.8VDC
Avarage current consumption		mA	70
Communications			
Type of communication port			RS485 Modbus-RTU protocol slave communication unit / isolated
Baud rate		bps	4800… 38400bps
Termination resistance			Integrated 120Ω
Connections			
Terminals type			Screw
Tightening torque for terminals			
	max	Nm	0.6
	Max	Ibft	5.4
Conductor section			
AWG/Kcmil			
	min		26
	max		16
IEC			
	min	mm²	0.14
	max	mm²	1.5
Ambient conditions			
Temperature			
Operating temperature			
	min	°C	-20
	max	°C	+55
Storage temperature			
	min	°C	-40
	max	°C	+70
Relative humidity		%	<90% (non condensing)
Housing			
Mounting			35mm DIN rail or screw fixing (M4x15mm)

The characteristics described in this document are subject to updates or modifications at any time. The descriptions, technical and functional information, illustrations and instructions in this brochure are purely illustrative, and are consequently not contractually binding

chanhvinh.com

Lovato electric
ENERGY AND AUTOMATION

LREP00
MODBUS-RTU PROTOCOL COMMUNICATION UNIT

Degree of protection		IP20
Dimensions (W x H x D)	mm	38 x 106 x 59.3
Weight	g	134

Dimensions

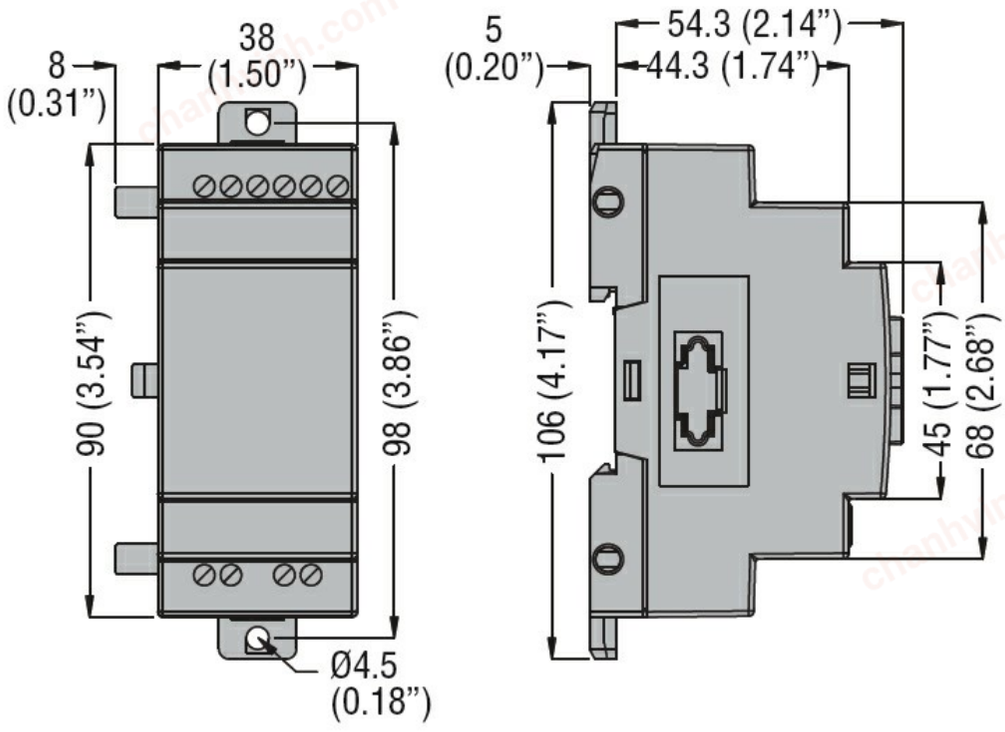

Wiring diagrams

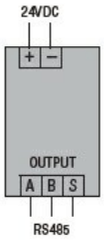

Certifications and compliance

Compliance

- CSA C22.2 n° 142
- IEC/EN 61131-2
- UL508

Certificates

- cULus
- EAC

The characteristics described in this document are subject to updates or modifications at any time. The descriptions, technical and functional information, illustrations and instructions in this brochure are purely illustrative, and are consequently not contractually binding