chanhvinh.com

Lovato electric
ENERGY AND AUTOMATION

HR502CD024

MINIATURE RELAY WITH LED STATE INDICATOR AND MECHANICAL ACTUATOR, 24VDC, 8A, 2C/O CONTACT. FITTING ON SOCKET HR5XS2...



Product designation			MINIATURE RELAYS
Product type designation			HR502C
Contact characteristics			
Contact configuration			2 C/O
Rated insulation voltage Ui IEC/EN		V	250
Rated impulse withstand voltage Uimp		kV	6
IEC Conventional free air thermal current Ith		A	8
Maximum instantaneous current		A	10
Rated current (In)		A	8
Relay control voltage		V	24VDC
Max contrallable power in			
	AC-1	W	2000
	AC-15	VA	150
Rated operating power AC-1			
		VA	2000
Rated operating power AC-15			
	230 VAC	VA	150
Rated operating current DC-1			
	30V	A	8
	110V	A	0.3
	220V	A	0.1
Minimum switching load		V / mA	5 / 100
Contact impedance		mΩ	100
Contact material			Ag/Ni
Operating times			
Closing		ms	<15
Opening		ms	<15
Operations			
Mechanical life		cycles	10000000
Electrical life AC1		cycles	50000
Coil characteristics			
Average coil consumption AC at 20°C		VA	1
Average coil consumption DC at 20°C		W	0.4
Operating range			
	Closing	% Un	75…110
	Opening	% Un	10…30
Maximum cycle frequency		cycles/h	3600
Mechanical features			
Max socket terminal tightening torque		Nm	0.6
Socket screw tightening tool (cross / flat blade)			PH1 / 4.5mm
Conductor section			
AWG/Kcmil			
	min		20
	max		14

The characteristics described in this document are subject to updates or modifications at any time. The descriptions, technical and functional information, illustrations and instructions in this brochure are purely illustrative, and are consequently not contractually binding

chanhvinh.com

HR502CD024

MINIATURE RELAY WITH LED STATE INDICATOR AND MECHANICAL ACTUATOR, 24VDC, 8A, 2C/O CONTACT. FITTING ON SOCKET HR5XS2...

	IEC			
		min	mm²	0.5
		max	mm²	2.5
Operating position				
		normal		Any
Fixing				On 35mm DIN rail and with screw

Ambient conditions

Temperature				
	Operating temperature			
		min	°C	-40
		max	°C	+70
	Storage temperature			
		min	°C	-40
		max	°C	+85

Other features

Indication	Yes
Mechanical contact position indicator	Yes
Mechanical test actuator	Yes

Dimensions

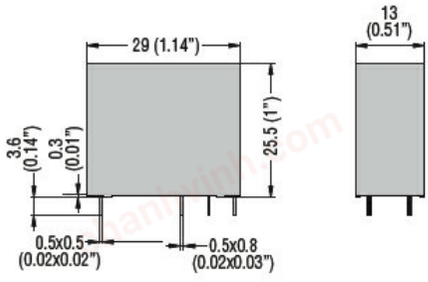

PCB layout

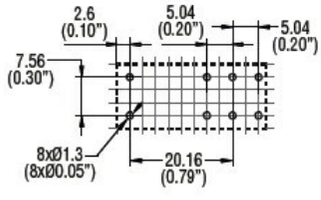

Wiring diagrams

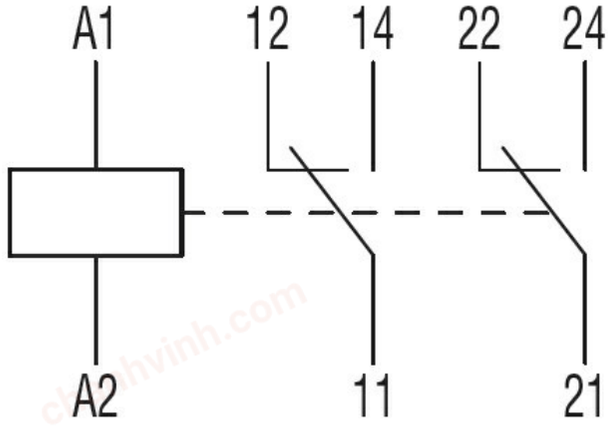

Certifications and compliance

Compliance

The characteristics described in this document are subject to updates or modifications at any time. The descriptions, technical and functional information, illustrations and instructions in this brochure are purely illustrative, and are consequently not contractually binding

chanhvinh.com

	IEC/EN 61810
Certificates	
	CSA
	cURus
	EAC
	VDE

ETIM classification

ETIM 8.0	EC001437 - Switching relay

The characteristics described in this document are subject to updates or modifications at any time. The descriptions, technical and functional information, illustrations and instructions in this brochure are purely illustrative, and are consequently not contractually binding