chanhvinh.com

Lovato electric
ENERGY AND AUTOMATION

FB03A3P

FUSE HOLDER UL RECOGNIZED AND CSA CERTIFIED, FOR 22X58MM FUSES. 125A RATED CURRENT AT 690VAC, 3P. WITHOUT STATUS INDICATOR. 6 MODULES

Product designation			Fuse holder
Product type designation			FB
Number of DIN modules			6
Operating voltage type			AC
Electrical features			
Rated current (In)		A	100
Rated operational voltage		V	690
IEC Utilization category			AC21B 690V
Total power dissipation		W	9.5
Derating factor of rated current In for different ambient temperature			
	20°C		1
	30°C		0.95
	40°C		0.9
	50°C		0.8
	60°C		0.7
	70°C		0.5
Derating factor of rated current In for side by side fuse holders (poles)			
	1-4		1
	5-6		0.8
	7-9		0.7
	≥10		0.6
Ambient conditions			
Operating temperature			
	min	°C	-40
	max	°C	70
Storage temperature			
	min	°C	-40
	max	°C	80
Max altitude		m	3000
Mechanical feautures			
Operating position			
	normal		Vertical plan
	allowable		Any
Mounting			35mm DIN rail
Tightening torque for terminals			
	max	Nm	4
	max	lbft	1.8
Conductor section			
	- Flexible max (IEC)	mm²	35
	- Flexible max (AWG)		2
	- Rigid max (IEC)	mm²	50
	- Rigid max (AWG)		1
Weight		g	334
Frontal IP degree			IP20
Dimensions			

The characteristics described in this document are subject to updates or modifications at any time. The descriptions, technical and functional information, illustrations and instructions in this brochure are purely illustrative, and are consequently not contractually binding

chanhvinh.com

FB03A3P

FUSE HOLDER UL RECOGNIZED AND CSA CERTIFIED, FOR 22X58MM FUSES. 125A RATED CURRENT AT 690VAC, 3P. WITHOUT STATUS INDICATOR. 6 MODULES

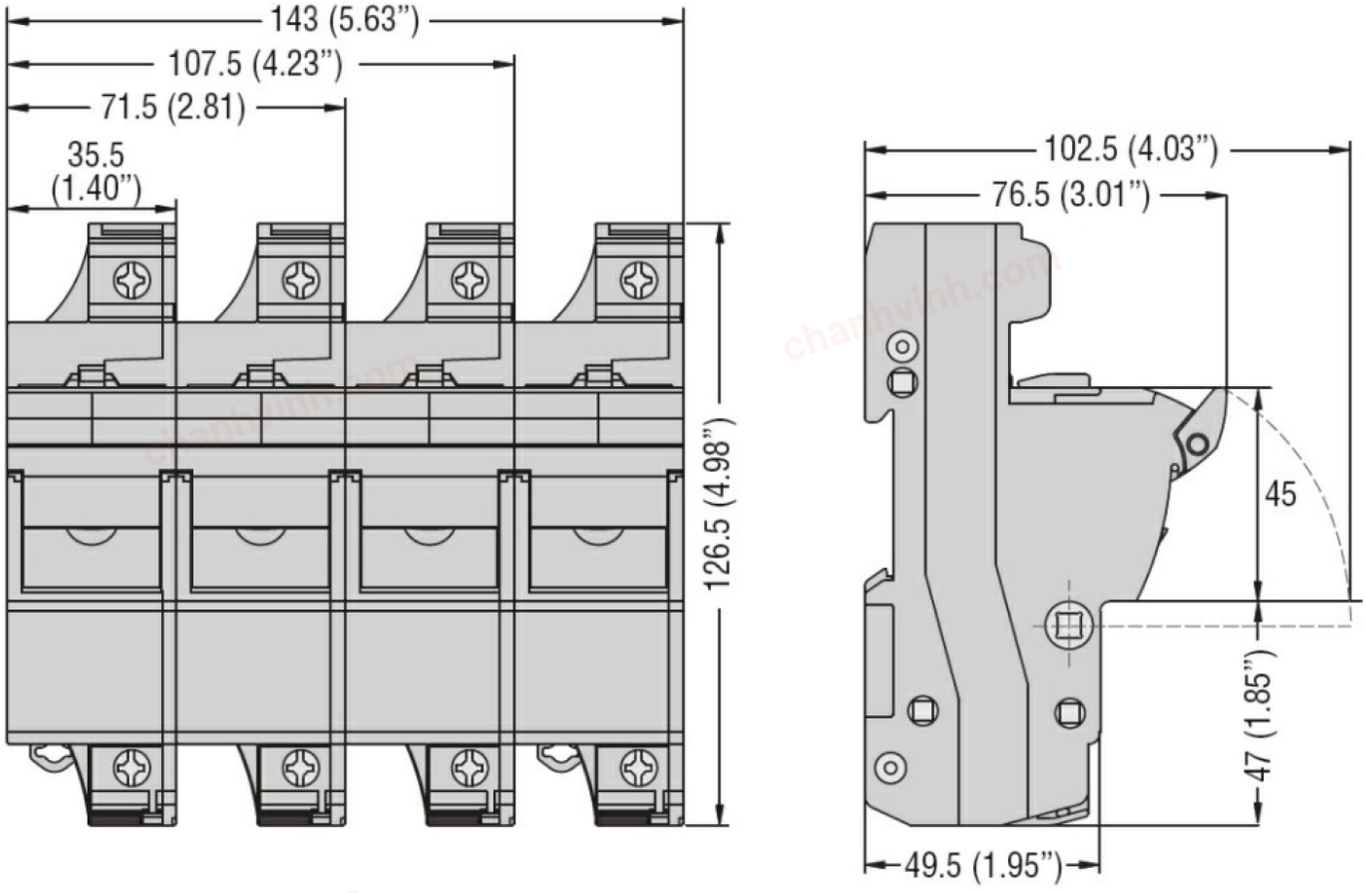

Certifications and compliance

Compliance	
	CSA C22.2 n°4248.1
	IEC/EN 60269-1
	IEC/EN 60269-2
	IEC/EN 60947-1
	IEC/EN 60947-3
	UL 4248-1
Certifications	
	cURus
	EAC

The characteristics described in this document are subject to updates or modifications at any time. The descriptions, technical and functional information, illustrations and instructions in this brochure are purely illustrative, and are consequently not contractually binding