chanhvinh.com

Lovato electric
ENERGY AND AUTOMATION

# 31RT35

Toroidal current transformers, 35mm (1,38”in)



| | |
|---|---|
| Product designation | Toroidal current transformers |

## Control circut

| | |
|---|---|
| Toroidal transformer | Diam. 35 mm/1.38" |

## Dimensions

RT35 - RT60 - RT80 - RT110 - RX10

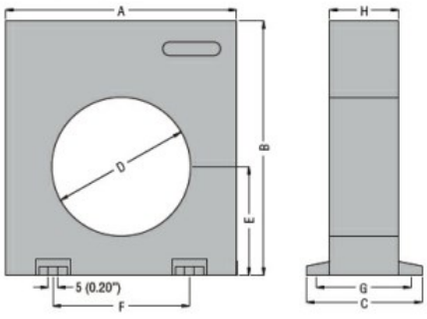


RT210 - RTA210

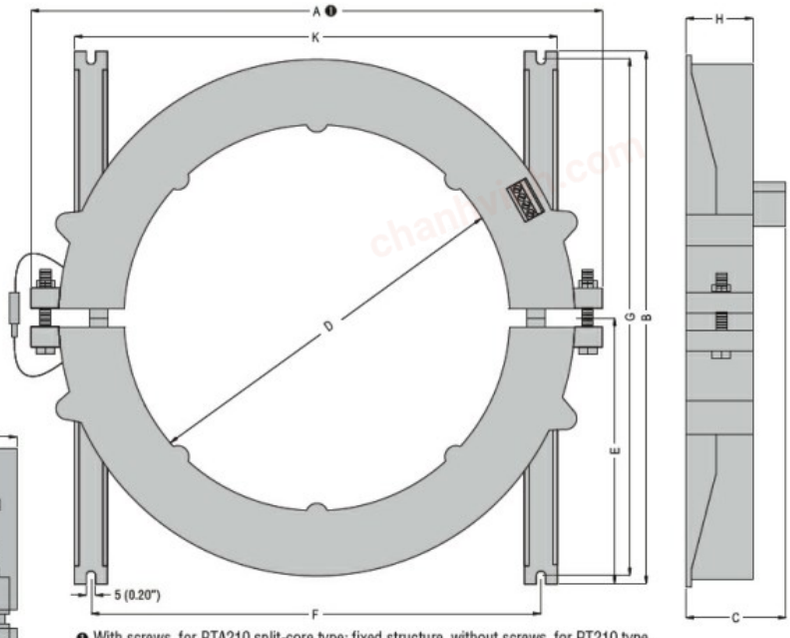


❶ With screws, for RTA210 split-core type; fixed structure, without screws, for RT210 type.

RTA110

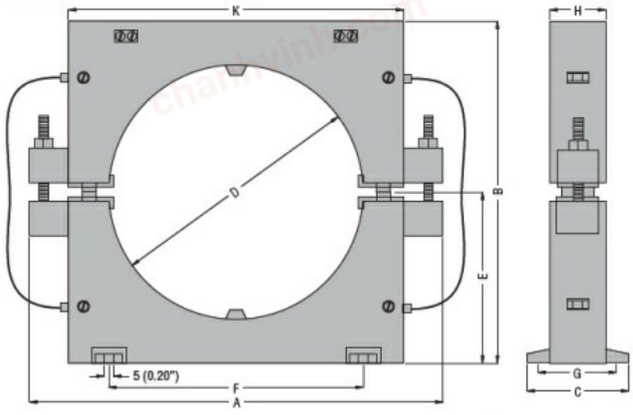


| TYPE | A | B | C | D | E | F | G | H | K |
|---|---|---|---|---|---|---|---|---|---|
| RT35 | 100 (3.94") | 110 (4.33") | 50 (1.97") | 35 (1.38") | 47 (1.85") | 60 (2.36") | 43 (1.69") | 30 (1.18") | — |
| RT60 | 100 (3.94") | 110 (4.33") | 50 (1.97") | 60 (2.36") | 47 (1.85") | 60 (2.36") | 43 (1.69") | 30 (1.18") | — |
| RT80 | 150 (5.90") | 160 (6.30") | 50 (1.97") | 80 (3.15") | 70 (2.75") | 110 (4.33") | 43 (1.69") | 30 (1.18") | — |
| RT110 | 150 (5.90") | 160 (6.30") | 50 (1.97") | 110 (4.33") | 70 (2.75") | 110 (4.33") | 43 (1.69") | 30 (1.18") | — |
| RT210 | 310 (12.20") | 290 (11.41") | 54 (2.12") | 210 (8.27") | 145 (5.71") | 240 (9.45") | 280 (11.02") | 36 (1.42") | 258 (10.16") |
| RTA110 | 180 (7.09") | 150 (5.90") | 45 (1.77") | 110 (4.33") | 75 (2.95") | 110 (4.33") | 38 (1.50") | 25 (0.98") | 145 (5.71") |
| RTA210 | 310 (12.20") | 290 (11.41") | 54 (2.12") | 210 (8.27") | 145 (5.71") | 240 (9.45") | 280 (11.02") | 36 (1.42") | 258 (10.16") |
| RX10 | 100 (3.94") | 110 (4.33") | 50 (1.97") | — | — | 60 (2.36") | 43 (1.69") | 30 (1.18") | — |

## Certifications and compliance

Compliant with standards

IEC/EN 60947-2

Certificates

EAC

## ETIM classification

| | |
|---|---|
| ETIM 8.0 | EC002048 - Current transformer |


The characteristics described in this document are subject to updates or modifications at any time. The descriptions, technical and functional information, illustrations and instructions in this brochure are purely illustrative, and are consequently not contractually binding