chanhvinh.com

Lovato electric
ENERGY AND AUTOMATION

31RT210

Toroidal current transformers, 210mm (8,27”in)



Product designation	Toroidal current transformers

Control circut

Toroidal transformer	Diam. 210 mm/8.27"

Dimensions

RT35 - RT60 - RT80 - RT110 - RX10

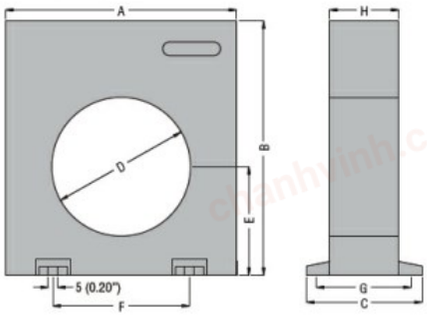

RT210 - RTA210

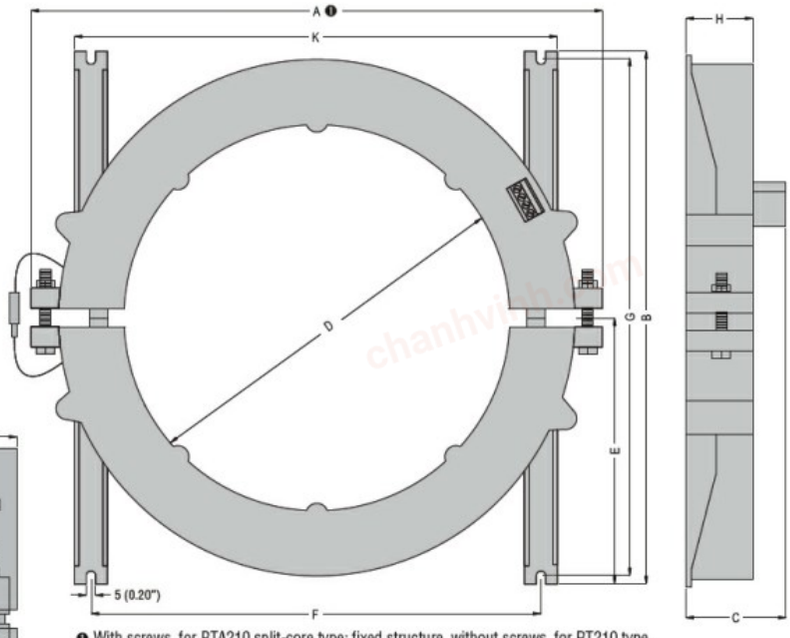

❶ With screws, for RTA210 split-core type; fixed structure, without screws, for RT210 type.

RTA110

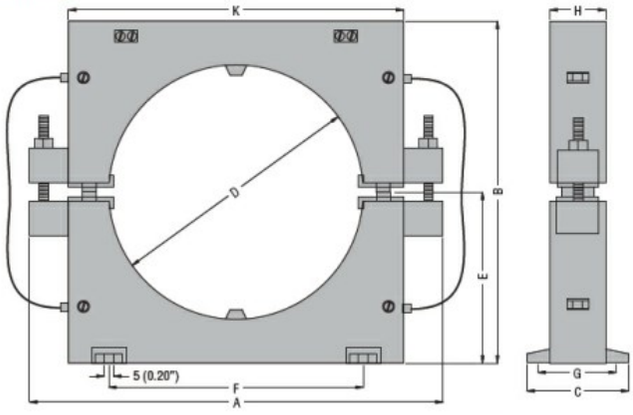

TYPE	A	B	C	D	E	F	G	H	K
RT35	100 (3.94")	110 (4.33")	50 (1.97")	35 (1.38")	47 (1.85")	60 (2.36")	43 (1.69")	30 (1.18")	—
RT60	100 (3.94")	110 (4.33")	50 (1.97")	60 (2.36")	47 (1.85")	60 (2.36")	43 (1.69")	30 (1.18")	—
RT80	150 (5.90")	160 (6.30")	50 (1.97")	80 (3.15")	70 (2.75")	110 (4.33")	43 (1.69")	30 (1.18")	—
RT110	150 (5.90")	160 (6.30")	50 (1.97")	110 (4.33")	70 (2.75")	110 (4.33")	43 (1.69")	30 (1.18")	—
RT210	310 (12.20")	290 (11.41")	54 (2.12")	210 (8.27")	145 (5.71")	240 (9.45")	280 (11.02")	36 (1.42")	258 (10.16")
RTA110	180 (7.09")	150 (5.90")	45 (1.77")	110 (4.33")	75 (2.95")	110 (4.33")	38 (1.50")	25 (0.98")	145 (5.71")
RTA210	310 (12.20")	290 (11.41")	54 (2.12")	210 (8.27")	145 (5.71")	240 (9.45")	280 (11.02")	36 (1.42")	258 (10.16")
RX10	100 (3.94")	110 (4.33")	50 (1.97")	—	—	60 (2.36")	43 (1.69")	30 (1.18")	—

Certifications and compliance

Compliant with standards

IEC/EN 60947-2

Certificates

EAC

ETIM classification

ETIM 8.0	EC002048 - Current transformer

The characteristics described in this document are subject to updates or modifications at any time. The descriptions, technical and functional information, illustrations and instructions in this brochure are purely illustrative, and are consequently not contractually binding