chanhvinh.com

LPMLD5

LED INTEGRATED MONOBLOCK PILOT LIGHT, STEADY LIGHT Ø22MM PLATINUM SERIES CHROMED PLASTIC, YELLOW, 48VAC/DC



General characteristics			
Colour			Yellow
Type of positions			Monoblock pilot light
Material			Polyamide
IEC degree of protection			IP66, IP67 and IP69K on front; IP20 on rear
Electrical characteristics			
Rated frequency		Hz	50-60
Supply voltage (AC)		V	48 (-15% … +10% Ue)
Supply voltage (DC)		V	48 (-15% … +10% Ue)
Maximum current consumption		mA	≤ 20
Operations			
Electrical life		hours	>30000
Mechanical features			
Tightening torque for terminals max		Nm	0.8
Terminals screw			Screw termination
Conductor section			
	AWG/kcmil conductor section		
	min		18
	max		16
	IEC		
	max	mm²	2.5
Fixing			Ring fixing Ø22mm
Weight		g	21
UL technical data			
UL degree of protection			Type1, 2, 3R, 4, 4X, 12, 12K on front
Ambient conditions			
Temperature			
	Operating temperature		
	min	°C	-25
	max	°C	+70
Dimensions			

The characteristics described in this document are subject to updates or modifications at any time. The descriptions, technical and functional information, illustrations and instructions in this brochure are purely illustrative, and are consequently not contractually binding

chanhvinh.com

Lovato electric
ENERGY AND AUTOMATION

LPMLD5

LED INTEGRATED MONOBLOCK PILOT LIGHT, STEADY LIGHT Ø22MM PLATINUM SERIES CHROMED PLASTIC, YELLOW, 48VAC/DC

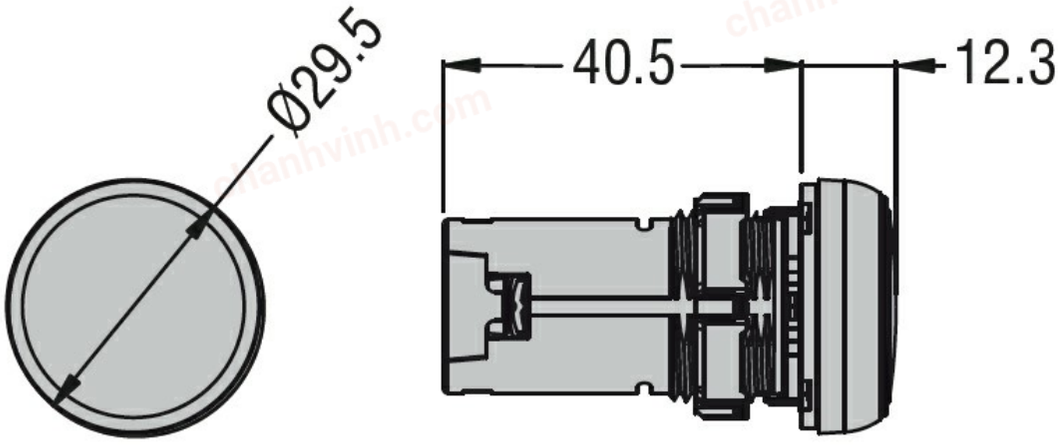

Wiring diagrams

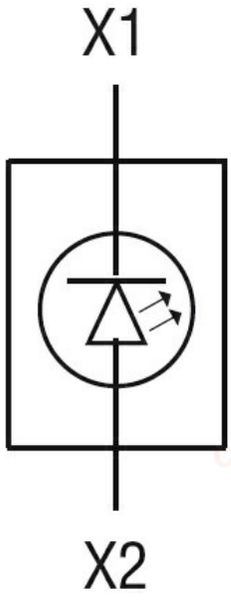

Certifications and compliance

Compliance	
	CSA C22.2 n° 14
	IEC/EN/BS 60947-1
	IEC/EN/BS 60947-5-1
	UL508
Certificates	
	cULus
	EAC

ETIM classification

ETIM 8.0	EC000272 - Indicator light complete

The characteristics described in this document are subject to updates or modifications at any time. The descriptions, technical and functional information, illustrations and instructions in this brochure are purely illustrative, and are consequently not contractually binding