chanhvinh.com

LPMLD4

LED INTEGRATED MONOBLOCK PILOT LIGHT, STEADY LIGHT Ø22MM PLATINUM SERIES CHROMED PLASTIC, RED, 48VAC/DC



General characteristics				
Colour				Red
Type of positions				Monoblock pilot light
Material				Polyamide
IEC degree of protection				IP66, IP67 and IP69K on front; IP20 on rear
Electrical characteristics				
Rated frequency			Hz	50-60
Supply voltage (AC)			V	48 (-15% … +10% Ue)
Supply voltage (DC)			V	48 (-15% … +10% Ue)
Maximum current consumption			mA	≤ 20
Operations				
Electrical life			hours	>30000
Mechanical features				
Tightening torque for terminals max			Nm	0.8
Terminals screw				Screw termination
Conductor section				
	AWG/kcmil conductor section			
		min		18
		max		16
	IEC			
		max	mm²	2.5
Fixing				Ring fixing Ø22mm
Weight			g	21
UL technical data				
UL degree of protection				Type1, 2, 3R, 4, 4X, 12, 12K on front
Ambient conditions				
Temperature				
	Operating temperature			
		min	°C	-25
		max	°C	+70
Dimensions				

The characteristics described in this document are subject to updates or modifications at any time. The descriptions, technical and functional information, illustrations and instructions in this brochure are purely illustrative, and are consequently not contractually binding

chanhvinh.com

LPMLD4

LED INTEGRATED MONOBLOCK PILOT LIGHT, STEADY LIGHT Ø22MM PLATINUM SERIES CHROMED PLASTIC, RED, 48VAC/DC

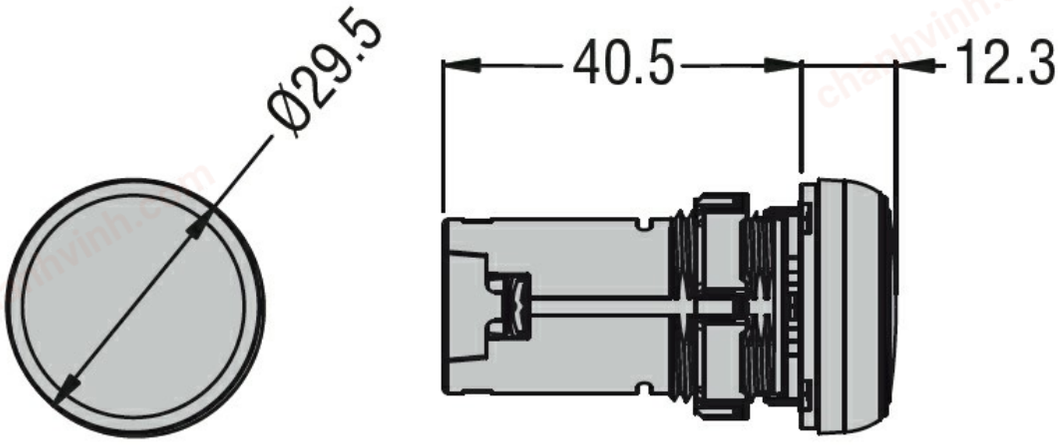

Wiring diagrams

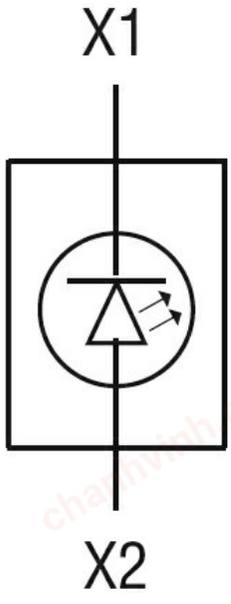

Certifications and compliance

Compliance

CSA C22.2 n° 14
IEC/EN/BS 60947-1
IEC/EN/BS 60947-5-1
UL508

Certificates

cULus
EAC

ETIM classification

ETIM 8.0	EC000272 - Indicator light complete

The characteristics described in this document are subject to updates or modifications at any time. The descriptions, technical and functional information, illustrations and instructions in this brochure are purely illustrative, and are consequently not contractually binding