chanhvinh.com

LPCS131

SELECTOR SWITCH ACTUATOR KNOB Ø22MM PLATINUM SERIES CHROMED PLASTIC, 3 POSITION, 1 > 0 < 2



General characteristics

Colour			Black
Type of positions			1 > 0 < 2
Material			Polyamide
IEC degree of protection			IP66, IP67 and IP69K

Mechanical features

Mechanical life		cycles	1000000
Mounting adapter			LPXAU120
Weight		g	37

UL technical data

UL degree of protection			Type1, 2, 3R, 4, 4X, 12, 12K

Ambient conditions

Temperature

Operating temperature			
	min	°C	-25
	max	°C	+70
Storage temperature			
	min	°C	-40
	max	°C	+85

Dimensions

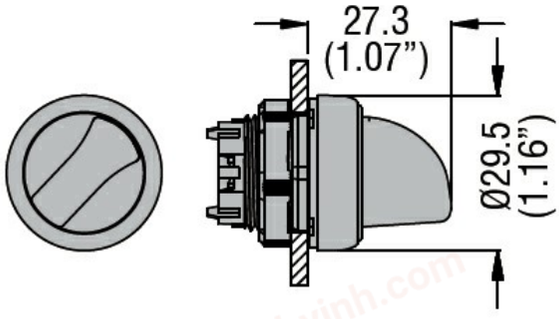

Certifications and compliance

Compliance

- CSA C22.2 n° 14
- IEC/EN/BS 60947-1
- IEC/EN/BS 60947-5-1
- UL508

Certificates

- CCC
- cULus

ETIM classification

ETIM 8.0	EC000222 - Front element for selector switch

The characteristics described in this document are subject to updates or modifications at any time. The descriptions, technical and functional information, illustrations and instructions in this brochure are purely illustrative, and are consequently not contractually binding