chanhvinh.com

LPCBL104

ILLUMINATED BUTTON ACTUATOR, SPRING RETURN Ø22MM PLATINUM SERIES CHROMED PLASTIC, FLUSH, RED



General characteristics

Colour		Red
Type of positions		Flush pushbutton
Material		Polyamide
IEC degree of protection		IP66, IP67 and IP69K

Mechanical features

Operating force	kg-lb	<0.5Kg / 1.1lb
Mechanical life - spring return actuators	cycles	5000000
Mounting adapter		LPXAU120
Weight	g	25

UL technical data

UL degree of protection		Type1, 2, 3R, 4, 4X, 12, 12K

Ambient conditions

Temperature

Operating temperature			
	min	°C	-25
	max	°C	+70
Storage temperature			
	min	°C	-40
	max	°C	+85

Dimensions

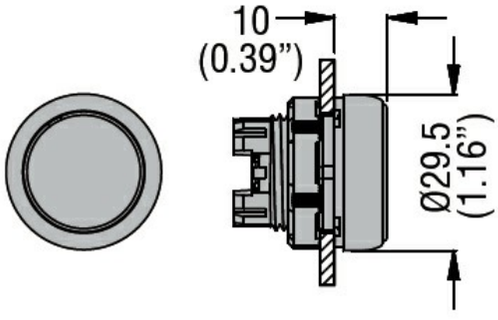

Certifications and compliance

Compliance

CSA C22.2 n° 14
IEC/EN/BS 60947-1
IEC/EN/BS 60947-5-1
UL508

Certificates

CCC
cULus
EAC
RINA

ETIM classification

The characteristics described in this document are subject to updates or modifications at any time. The descriptions, technical and functional information, illustrations and instructions in this brochure are purely illustrative, and are consequently not contractually binding

chanhvinh.com

LPCBL104

ILLUMINATED BUTTON ACTUATOR, SPRING RETURN Ø22MM PLATINUM SERIES CHROMED PLASTIC, FLUSH, RED

ETIM 8.0

EC000221 - Front element for push button

chanhvinh.com

The characteristics described in this document are subject to updates or modifications at any time. The descriptions, technical and functional information, illustrations and instructions in this brochure are purely illustrative, and are consequently not contractually binding