chanhvinh.com

Lovato electric
ENERGY AND AUTOMATION

BF160T4E230

FOUR-POLE CONTACTOR, IEC OPERATING CURRENT ITH (AC1) = 250A, AC/DC COIL, 100...250VAC/DC



Contact characteristics			
Number of poles		Nr.	4
Rated insulation voltage Ui IEC/EN		V	1000
Rated impulse withstand voltage Uimp		kV	8
Operational frequency			
	min	Hz	25
	max	Hz	400
IEC Conventional free air thermal current Ith ≤ 40°C		A	250
Operational current Ie			
	AC-1 (≤40°C)	A	250
	AC-1 (≤55°C)	A	210
	AC-1 (≤70°C)	A	180
	AC-3 (≤440V ≤55°C)	A	160
	AC-4 (400V)	A	75
Rated operational current AC-3 (T≤55°C)			
	230V	A	160
	400V	A	160
	415V	A	160
	440V	A	160
	500V	A	150
	690V	A	135
	1000V	A	60
Rated operational power AC-1 (T≤40°C)			
	230V	kW	95
	400V	kW	165
	500V	kW	181
	690V	kW	284
IEC max current Ie in DC1 with L/R ≤ 1ms with 1 poles in series			
	≤24V	A	250
	48V	A	250
	75V	A	250
	110V	A	110
	220V	A	–
IEC max current Ie in DC1 with L/R ≤ 1ms with 2 poles in series			
	≤24V	A	250
	48V	A	250
	75V	A	250
	110V	A	150
	220V	A	130
IEC max current Ie in DC1 with L/R ≤ 1ms with 3 poles in series			
	≤24V	A	250
	48V	A	250
	75V	A	250
	110V	A	160
	220V	A	150

The characteristics described in this document are subject to updates or modifications at any time. The descriptions, technical and functional information, illustrations and instructions in this brochure are purely illustrative, and are consequently not contractually binding

chanhvinh.com

	330V	A	130
IEC max current Ie in DC1 with L/R ≤ 1ms with 4 poles in series			
	≤24V	A	250
	48V	A	250
	75V	A	250
	110V	A	250
	220V	A	250
IEC max current Ie in DC3-DC5 with L/R ≤ 15ms with 1 poles in series			
	≤24V	A	250
	48V	A	250
	75V	A	160
	110V	A	80
	220V	A	–
IEC max current Ie in DC3-DC5 with L/R ≤ 15ms with 2 poles in series			
	≤24V	A	250
	48V	A	250
	75V	A	160
	110V	A	120
	220V	A	90
IEC max current Ie in DC3-DC5 with L/R ≤ 15ms with 3 poles in series			
	≤24V	A	250
	48V	A	250
	75V	A	160
	110V	A	140
	220V	A	120
	330V	A	90
IEC max current Ie in DC3-DC5 with L/R ≤ 15ms with 4 poles in series			
	≤24V	A	250
	48V	A	250
	75V	A	160
	110V	A	140
	220V	A	140
	330V	A	140
	460V	A	90
Short-time allowable current for 10s (IEC/EN60947-1)		A	1280
Protection fuse			
	gG (IEC)	A	315
	aM (IEC)	A	200
Making capacity (RMS value)		A	1360
Breaking capacity at voltage			
	440V	A	1360
	500V	A	1326
	690V	A	1139
Resistance per pole (average value)		mΩ	0.18
Power dissipation per pole (average value)			
	Ith	W	11
	AC-3	W	4.5
Tightening torque for terminals			
	min	Nm	18
	max	Nm	18
	min	lbin	159
	max	lbin	159
Tightening torque for coil terminal			

The characteristics described in this document are subject to updates or modifications at any time. The descriptions, technical and functional information, illustrations and instructions in this brochure are purely illustrative, and are consequently not contractually binding

chanhvinh.com

Lovato electric
ENERGY AND AUTOMATION

BF160T4E230

FOUR-POLE CONTACTOR, IEC OPERATING CURRENT ITH (AC1) = 250A, AC/DC COIL, 100...250VAC/DC

		min	Nm	0.8
		max	Nm	1
Power terminal protection according to IEC/EN 60529				IP00
Mechanical features				
Operating position				
		normal		Vertical plan
		allowable		±30°
Fixing				Screw
Weight			g	4000
Operations				
Mechanical life			cycles	10000000
Electrical life			cycles	1000000 (Ie AC-3 400V)
Safety related data				
Performance level B10d according to EN/ISO 13489-1				
		rated load	cycles	1000000
		mechanical load	cycles	10000000
EMC compatibility				yes
AC coil operating				
Rated AC voltage at 50/60Hz, 60Hz				
		min	V	100
		max	V	250
AC operating voltage				
	of 50/60Hz coil powered at 50Hz			
	pick-up			
		min	%Us	80 Us min
		max	%Us	110 Us max
	drop-out			
		max	%Us	≤75 Us min
	of 50/60Hz coil powered at 60Hz			
	pick-up			
		min	%Us	80 Us min
		max	%Us	110 Us max
	drop-out			
		max	%Us	≤75 Us min
AC average coil consumption at 20°C				
	of 50/60Hz coil powered at 50Hz			
		in-rush	VA	300
		holding	VA	6.9
	of 50/60Hz coil powered at 60Hz			
		in-rush	VA	300
		holding	VA	6.9
	of 60Hz coil powered at 60Hz			
		in-rush	VA	300
		holding	VA	6.9
Dissipation at holding ≤20°C 50Hz			W	1.5...3.0
DC coil operating				
DC rated control voltage				
		min	V	100
		max	V	250
max			V	250
DC operating voltage				
	pick-up			

The characteristics described in this document are subject to updates or modifications at any time. The descriptions, technical and functional information, illustrations and instructions in this brochure are purely illustrative, and are consequently not contractually binding

chanhvinh.com

Lovato electric
ENERGY AND AUTOMATION

BF160T4E230

FOUR-POLE CONTACTOR, IEC OPERATING CURRENT ITH (AC1) = 250A, AC/DC COIL, 100...250VAC/DC

			min	%Us	85 Us min
			max	%Us	110 Us max
	drop-out				
			max	%Us	≤70 Us min
Average coil consumption ≤20°C					
			in-rush	W	161
			holding	W	2.3
Max cycles frequency					
Mechanical operation				cycles/h	1000
Operating times					
Average time for Us control					
	in AC				
		Closing NO			
			min	ms	50
			max	ms	100
		Opening NO			
			min	ms	35
			max	ms	75
UL technical data					
Rated operational voltage AC (UL)				V	600
Yielded mechanical performance					
	for three-phase AC motor				
			200/208V	HP	50
			220/240V	HP	60
			460/480V	HP	125
			575/600V	HP	150
General USE					
	Contactor				
			AC current	A	250
Short-circuit protection fuse, 600V					
	High fault				
			Short circuit current	kA	100
			Fuse rating	A	400
			Fuse class		J
	Standard fault				
			Short circuit current	kA	10
			Fuse rating	A	400
			Fuse class		RK5
Ambient conditions					
Temperature					
	Operating temperature				
			min	°C	-40
			max	°C	70
	Storage temperature				
			min	°C	-50
			max	°C	80
Max altitude				m	3000
Resistance & Protection					
Pollution degree					3
Dimensions					

The characteristics described in this document are subject to updates or modifications at any time. The descriptions, technical and functional information, illustrations and instructions in this brochure are purely illustrative, and are consequently not contractually binding

chanhvinh.com

Lovato electric
ENERGY AND AUTOMATION

BF160T4E230

FOUR-POLE CONTACTOR, IEC OPERATING CURRENT ITH (AC1) = 250A, AC/DC COIL, 100...250VAC/DC

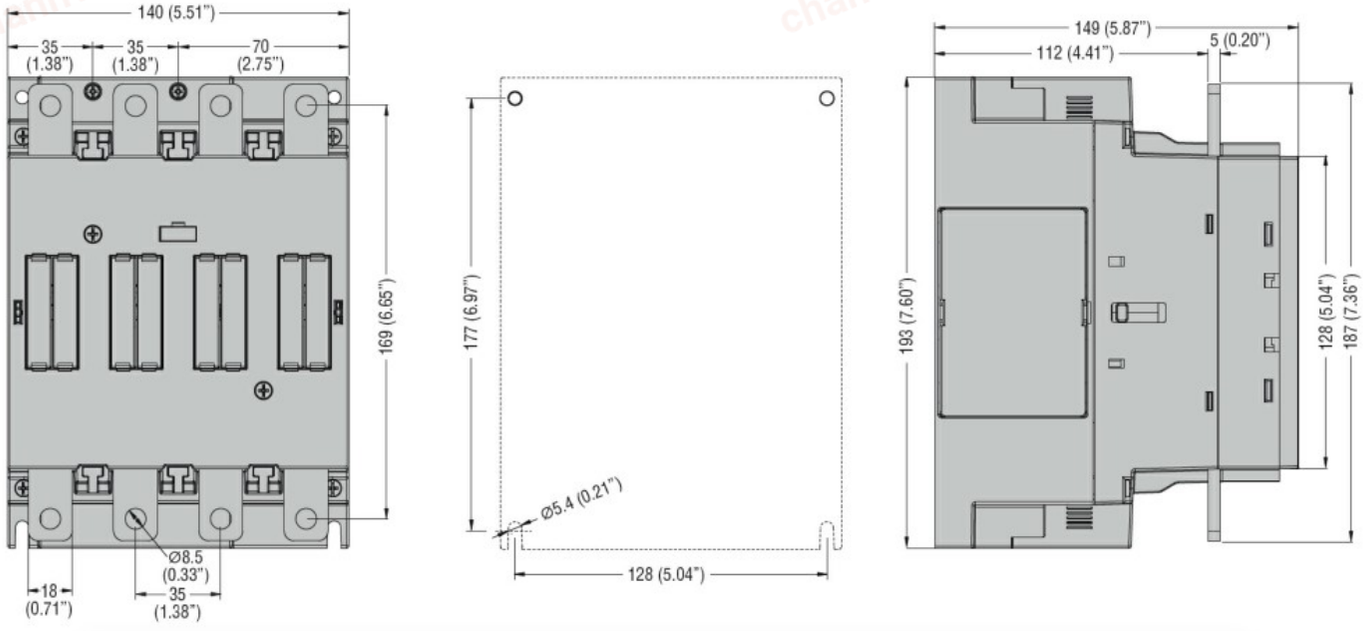

Wiring diagrams

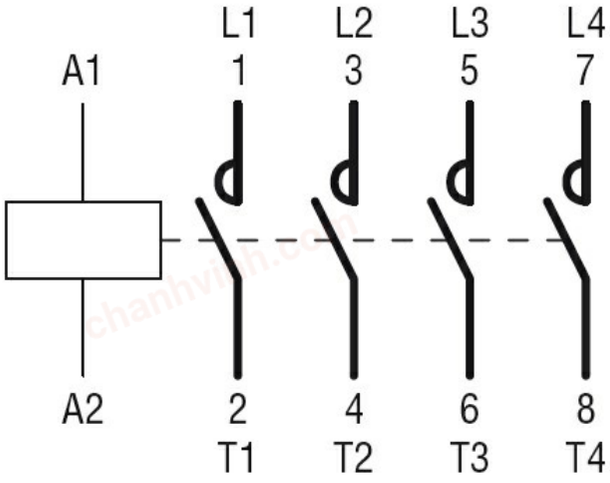

Certifications and compliance

Compliance

CSA C22.2 n° 60947-1
CSA C22.2 n° 60947-4-1
IEC/EN/BS 60947-1
IEC/EN/BS 60947-4-1
UL 60947-1
UL 60947-4-1

Certificates

cULus

ETIM classification

ETIM 8.0	EC000066 - Power contactor, AC switching

The characteristics described in this document are subject to updates or modifications at any time. The descriptions, technical and functional information, illustrations and instructions in this brochure are purely illustrative, and are consequently not contractually binding