chanhvinh.com

Littelfuse
Expertise Applied | Answers Delivered

TVS Diode Arrays (SPA® Diodes)

General Purpose ESD Protection - SP712

SP712 Series 640W Asymmetrical TVS Diode Array

HF RoHS Pb GREEN



Description

The SP712 TVS Diode Array is designed to protect RS-485 applications with asymmetrical working voltages (-7V to 12V) from damage due to electrostatic discharge (ESD), electrical fast transients (EFT), and lightning induced surges.

The SP712 can absorb repetitive ESD strikes above the maximum level specified in IEC 61000-4-2 international standard without performance degradation and safely dissipate up to 20A of 8/20us induced surge current (IEC 61000-4-5) with very low clamping voltages.

Pinout and Functional Block Diagram

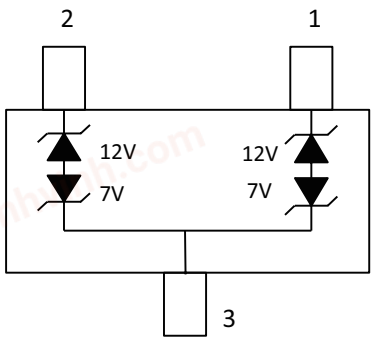

Features

- ESD, IEC 61000-4-2, ±30kV contact, ±30kV air
- EFT, IEC 61000-4-4, 50A (5/50ns)
- Lightning, IEC 61000-4-5 2nd edition, 20A (t_P=8/20μs)
- Working Voltages: -7V to 12V
- Low clamping voltage
- Low leakage current
- Halogen free, Lead free and RoHS compliant
- Moisture Sensitivity Level(MSL -1)
- AEC-Q101 qualified

Applications

- RS-485
- Fieldbus
- Modbus
- Profibus
- DMX512
- Security Systems
- Automated Teller Machines (ATMs)
- Lighting Control - DALI
- Communication Equipments

RS-485 Application Example

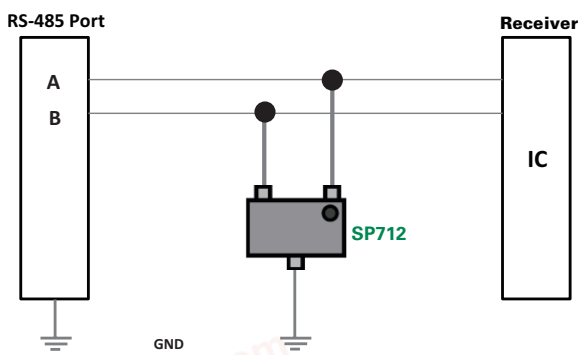

Life Support Note:
Not Intended for Use in Life Support or Life Saving Applications
The products shown herein are not designed for use in life sustaining or life saving applications unless otherwise expressly indicated.

©2020 Littelfuse, Inc.
Specifications are subject to change without notice.
Revision: 01/13/20

chanhvinh.com

Littelfuse
Expertise Applied | Answers Delivered

TVS Diode Arrays (SPA® Diodes)
General Purpose ESD Protection - SP712

Absolute Maximum Ratings

Symbol	Parameter	Value	Units
P_{Pk}	Peak Pulse Power (t_p=8/20µs)	640	W
I_{PP}	Peak Pulse Current (t_p=8/20µs)	20	A
T_{OP}	Operating Temperature	-40 to 125	°C
T_{STOR}	Storage Temperature	-55 to 150	°C

Notes:

CAUTION: Stresses above those listed in "Absolute Maximum Ratings" may cause permanent damage to the component. This is a stress only rating and operation of the component at these or any other conditions above those indicated in the operational sections of this specification is not implied.

Electrical Characteristics (T_{OP}=25°C)

Parameter	Symbol	Test Conditions	Min	Typ	Max	Units
Reverse Standoff Voltage	V_{RWM}	I_R=1µA, Pin 3 to Pin 1 or Pin 2			7.0	V
		I_R=1µA, Pin 1 or Pin 2 to Pin 3			12.0	V
Breakdown Voltage	V_{BR}	I_R=1mA, Pin 3 to Pin 1 or Pin 2	7.5	9		V
		I_R=1mA, Pin 1 or Pin 2 to Pin 3	13.3	14.5		V
Reverse Leakage Current	I_{LEAK}	V_R=7V			20	µA
		V_R=12V			1	µA
Clamp Voltage[1]	V_C	I_{PP}=1A, t_p=8/20µs, Pin 1 or Pin 2 to Pin 3		17	19	V
		I_{PP}=1A, t_p=8/20µs, Pin 3 to Pin 1 or Pin 2		10	11	V
		I_{PP}=20A, t_p=8/20µs, Pin 1 or Pin 2 to Pin 3		28	32	V
		I_{PP}=20A, t_p=8/20µs, Pin 3 to Pin 1 or Pin 2		17	20	V
Dynamic Resistance[2]	R_{DYN}	TLP, t_P=100ns		0.26		Ω
ESD Withstand Voltage[1]	V_{ESD}	IEC 61000-4-2 (Contact Discharge)	±30			kV
		IEC 61000-4-2 (Air Discharge)	±30			kV
Diode Capacitance[1]	$C_{I/O-GND}$	Reverse Bias=0V, f=1MHz; Pin 1 or Pin 2 to Pin 3			75	pF

Notes : 1. Parameter is guaranteed by design and/or component characterization.
2 Transmission Line Pulse (TLP) test setting : Std.TDR(50Ω),tp=100ns, tr=0.2ns ITLP and VTLP averaging window: start t1=70ns to end t2=90ns

Capacitance vs. Reverse Bias

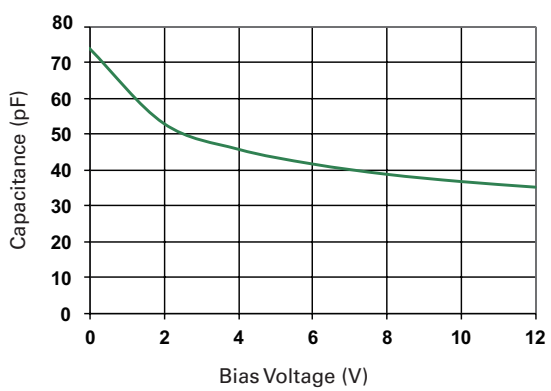

Clamping Voltage vs. I_{PP}

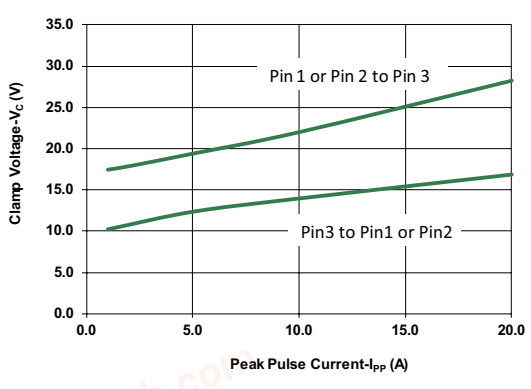

©2020 Littelfuse, Inc.
Specifications are subject to change without notice.
Revision: 01/13/20

chanhvinh.com

Littelfuse
Expertise Applied | Answers Delivered

TVS Diode Arrays (SPA® Diodes)

General Purpose ESD Protection - SP712

Positive Transmission Line Pulsing (TLP) Plot

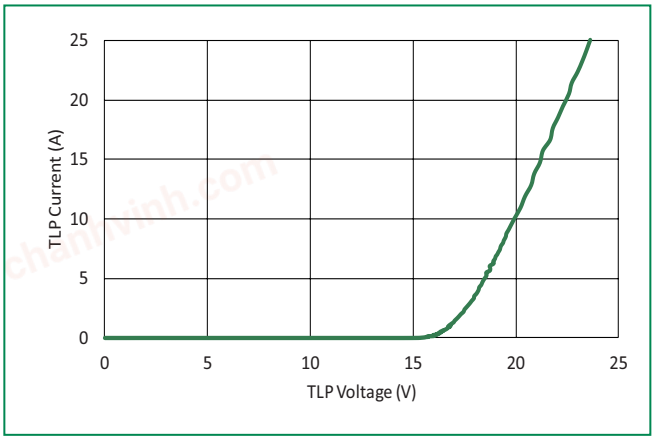

Negative Transmission Line Pulsing (TLP) Plot

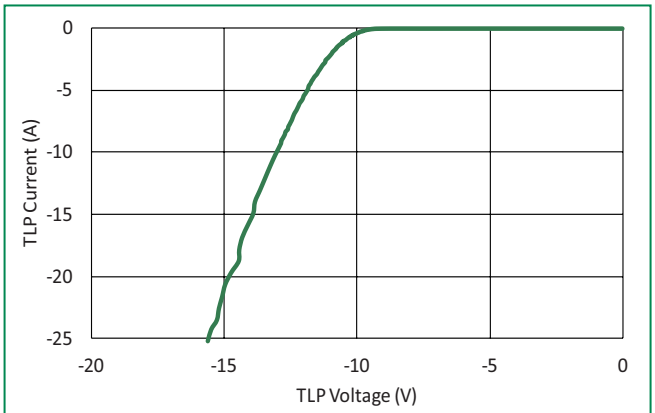

IEC 61000-4-2 +8kV Contact ESD Clamping Voltage

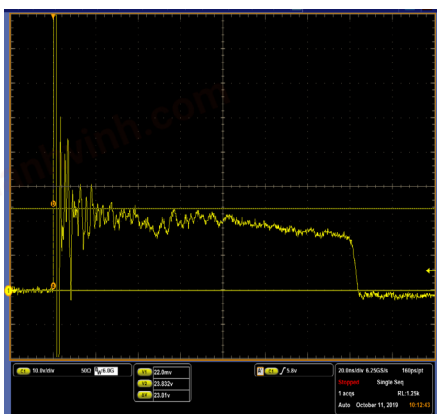

IEC 61000-4-2 -8kV Contact ESD Clamping Voltage

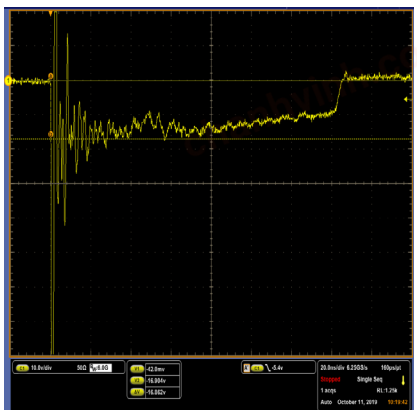

8/20µs Pulse Waveform

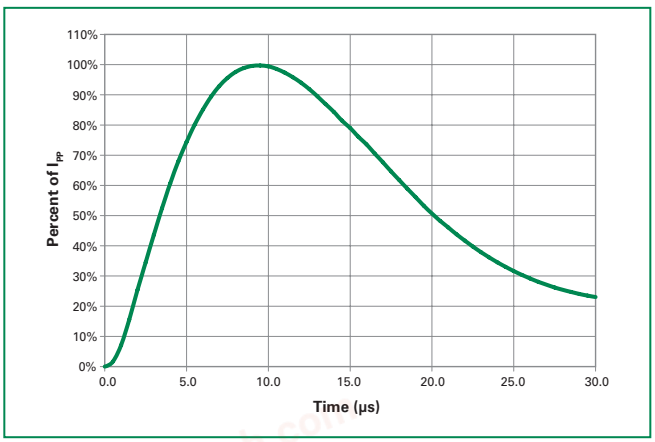

©2020 Littelfuse, Inc.
Specifications are subject to change without notice.
Revision: 01/13/20

chanhvinh.com

Littelfuse
Expertise Applied | Answers Delivered

TVS Diode Arrays (SPA® Diodes)
General Purpose ESD Protection - SP712

Soldering Parameters

Reflow Condition		Pb – Free assembly
Pre Heat	- Temperature Min ($T_{s(min)}$)	150°C
	- Temperature Max ($T_{s(max)}$)	200°C
	- Time (min to max) (t_s)	60 – 180 secs
Average ramp up rate (Liquidus) Temp (T_L) to peak		3°C/second max
$T_{S(max)}$ to T_L - Ramp-up Rate		3°C/second max
Reflow	- Temperature (T_L) (Liquidus)	217°C
	- Temperature (t_L)	60 – 150 seconds
Peak Temperature (T_P)		$260^{+0/-5}$ °C
Time within 5°C of actual peak Temperature (t_p)		20 – 40 seconds
Ramp-down Rate		6°C/second max
Time 25°C to peak Temperature (T_P)		8 minutes Max.
Do not exceed		260°C

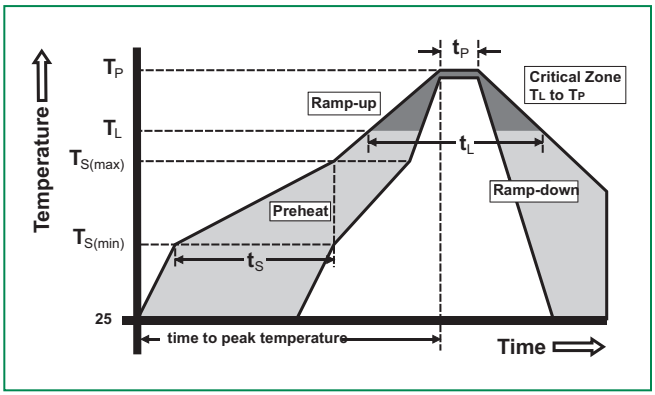

Product Characteristics

Lead Plating	Matte Tin
Lead Material	Copper Alloy
Lead Coplanarity	0.004 inches(0.102mm)
Substrate Material	Silicon
Body Material	Molded Compound
Flammability	UL Recognized compound meeting flammability rating V-0

Part Marking System

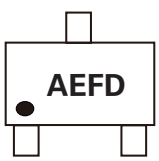

AE : Part code
F : Assembly code
D : Date code

Ordering Information

Part Number	Package	Min. Order Qty.
SP712-02HTG	SOT23-3L	3000

Part Numbering System

SP 712 - 02 H T G

- SP: TVS Diode Arrays (SPA® Diodes)
- 712: Series
- 02: Working Voltage
- H: Package — H: SOT23-3L
- T: Tape & Reel
- G: Green
- Number of Channels

©2020 Littelfuse, Inc.
Specifications are subject to change without notice.
Revision: 01/13/20

chanhvinh.com

Littelfuse
Expertise Applied | Answers Delivered

TVS Diode Arrays (SPA® Diodes)
General Purpose ESD Protection - SP712

Package Dimensions — SOT23-3

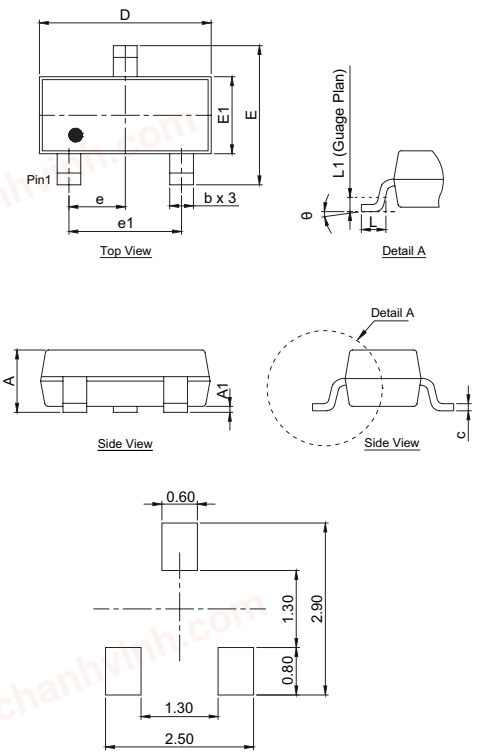

Recommended soldering pad layout (unit :mm)
Drawing# : H03-B

Package	SOT23-3			
Pins	3			
JEDEC	TO-236			
	Millimeters		Inches	
	Min	Max	Min	Max
A	0.90	1.15	0.035	0.045
A1	0.00	0.10	0.000	0.004
b	0.30	0.51	0.012	0.020
c	0.08	0.20	0.003	0.008
D	2.80	3.04	0.110	0.120
E	2.10	2.64	0.083	0.104
E1	1.20	1.40	0.047	0.055
e	0.95 BSC		0.038 BSC	
e1	1.90 BSC		0.075 BSC	
L	0.30	0.55	0.012	0.022
L1	0.25 BSC		0.010 BSC	
θ	0°	8°	0°	8°

Embossed Carrier Tape & Reel Specification — SOT23-3

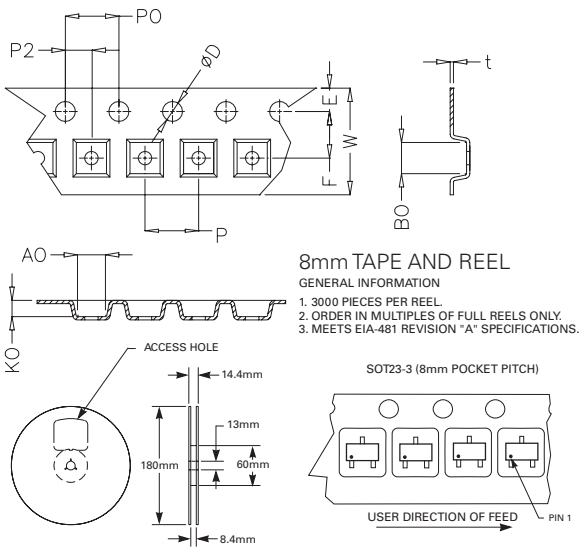

Symbol	Millimeters		Inches	
	Min	Max	Min	Max
E	1.65	1.85	0.065	0.073
F	3.40	3.60	0.134	0.142
P2	1.90	2.10	0.075	0.083
D	1.40	1.60	0.055	0.063
P0	3.90	4.10	0.154	0.161
W	7.70	8.30	0.303	0.327
P	3.90	4.10	0.154	0.161
A0	3.05	3.25	0.120	0.128
B0	2.67	2.87	0.105	0.113
K0	1.12	1.32	0.044	0.052
t	0.22	0.24	0.009	0.009

Disclaimer Notice - Information furnished is believed to be accurate and reliable. However, users should independently evaluate the suitability of and test each product selected for their own applications. Littelfuse products are not designed for, and may not be used in, all applications. Read complete Disclaimer Notice at http://www.littelfuse.com/disclaimer-electronics.

©2020 Littelfuse, Inc.
Specifications are subject to change without notice.
Revision: 01/13/20