chanhvinh.com

AC/DC Current Transducer DHR-C420

I_{PN} = 500 .. 1000 A

The transducer for the electronic measurement of DC & distorted AC waveform currents, with galvanic isolation between the primary circuit (power) and the secondary circuit (measurement). True RMS 4-20 mA current output.

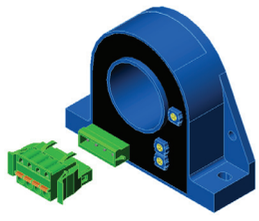

Electrical data

Primary Nominal DC & AC Current I_{PN} (A.t.RMS)	Primary AC Current Max. Peak Value [1] I_P (A)	Output current I_{OUT} (mA DC)	Type
500 [2]	1800	4-20	**DHR 500 C420**
600 [2]	1800	4-20	**DHR 600 C420**
1000 [2]	1800	4-20	**DHR 1000 C420**

R_L	Load resistance	< 300	Ω
V_C	Supply voltage[2]	+ 20 .. 50	V DC
I_C	Current consumption	30 mA + I_{OUT}	
I_{SL}	Output current limitation	< 25	mA
$\hat{I}_P$	Overload capability (Ampere Turns)	30000	A.t

Performance data

X	Accuracy @ I_{PN}, T_A = 25°C (excluding offset)	< ± 1	% of I_{PN}
ε_L	Linearity error (1% of I_{PN} .. ± I_{PN})	< ± 1.0	% of I_{PN}
I_{OUT}	Output current @ I_P=0, T_A = 25°C	4	mA+/- I_{OE}
I_{OE}	Electrical offset current @ T_A = 25°C	< ± 1.0	% of I_{PN}
TCI_{OE}	Temperature coefficient of I_{OE} (0..+60 °C)	± 3.2	µA/K
	(-40..+70 °C)	± 6.4	µA/K
TCI_{OUT}	Temperature coefficient of I_{OUT} (% of reading)	± 0.1	%/K
t_r	Response time to 90 % of I_{PN} step	< 150	ms
BW	Frequency bandwidth (± 1 dB)	DC 20..6000	Hz

General data

T_A	Surrounding operating temperature	- 40 .. + 70	°C
T_S	Surrounding storage temperature	- 40 .. + 85	°C
m	Mass	260	g
IPxx	Protection degree	IP20	

Notes :[1] The Max. Peak AC Current is the highest peak level of the primary signal that is taken into account for accurate True RMS calculation. Yet the device is designed for maximum continuous True RMS value equal to I_{PN}, whereas the output is limited by the above specified output limitation.

[2] According to the UL 508 Standard for Safety for Industrial Control Equipment the primary current must not exceed 475 A.t.RMS through the transducer hole and the supply voltage must not exceed 42VDC..

Features

- VFD and SCR waveforms current measurement
- True RMS output
- 4-20 mA current output
- Panel mounting
- Eliminates insertion loss
- Isolated plastic case recognized according to UL94-V0

Advantages

- Large aperture for cable up to Ø32mm
- High isolation between primary and secondary circuits
- Easy installation

Applications

- ***VFD Controlled Loads***
  VFD output indicates how the motor and attached load are operating.
- ***SCR Controlled Loads***
  Acurate measurement of phase angle fired or burst fired (time proportioned) SCRs. Current measurement gives faster response than temperature measurement.
- ***Switching Power Supplies and Electronic Ballasts***
  True RMS sensing is the most accurate way to measure power supply or ballast input power.

Application domain

- Energy and Automation

LEM reserves the right to carry out modifications on its transducers, in order to improve them, without prior notice.

chanhvinh.com

Current Transducer DHR-C420

Isolation characteristics

V_b	Rated isolation voltage rms [3]	300	V
	according to the standard IEC 61010-1 and with the following conditions:		
	- Reinforced isolation		
	- Over voltage category CAT III		
	- Pollution degree PD2		
	- Heterogeneous field		
V_d	Rms voltage for AC isolation test [4], 50 Hz, 1min	4.0	kV
$\hat{V}_w$	Impulse withstand voltage [4], 1.2/50 uS	7.3	kV
dCp	Creepage distance	7.2	mm
dCl	Clearance distance	7.2	mm
CTI	Comparative tracking index (Group I)	> 600	

Notes :[3] Between primary conductor voltage and ground. The voltage category could be improved according to the insulation characteristic given by the cable manufacturer. The UL 508 Standard for Safety for Industrial Control Equipment requires that only insulated conductors are used as primary circuit with this transducer.

[4] Between primary (completely filling the aperture) and secondary.

Transfer characteristics

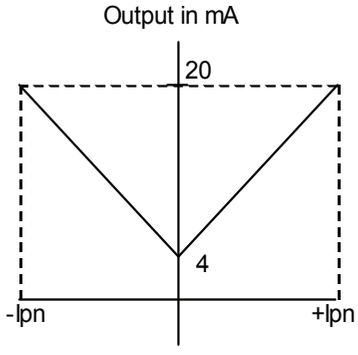

LEM reserves the right to carry out modifications on its transducers, in order to improve them, without prior notice.

chanhvinh.com

Current Transducer DHR-C420

Safety and warning notes

In order to guarantee safe operation of the transducer and to be able to make proper use of all features and functions, please read these instructions thoroughly!
Safe operation can only be guaranteed if the transducer is used for the purpose it has been designed for and within the limits of the technical specifications.
Ensure you get up-to-date technical information that can be found in the latest associated datasheet under www.lem.com.



Caution! Risk of danger

Ignoring the warnings can lead to serious injury and/or cause damage!
The electric measuring transducer may only be installed and put into operation by qualified personnel that have received an appropriate training.
The corresponding national regulations shall be observed during installation and operation of the transducer and any electrical conductor.
The transducer shall be used in electric/electronic equipment with respect to applicable standards and safety requirements and in accordance with all the related systems and components manufacturers' operating instructions.



Caution! Risk of electrical shock

When operating the transducer, certain parts of the module may carry hazardous live voltage (e.g. primary conductor, power supply).
The user shall ensure to take all measures necessary to protect against electrical shock.
The transducer is a built-in device containing conducting parts that shall not be accessible after installation.
A protective enclosure or additional insulation barrier may be necessary.
The transducer shall not be put into operation if the jaw opening is open (split core version) or the installation is not completed.
Installation and maintenance shall be done with the main power supply disconnected except if there are no hazardous live parts in or in close proximity to the system and if the applicable national regulations are fully observed.

Safe and trouble-free operation of this transducer can only be guaranteed if transport, storage and installation are carried out correctly and operation and maintenance are carried out with care.

chanhvinh.com

Dimensions DHR-C420 (in mm. 1 mm = 0.0394 inch)

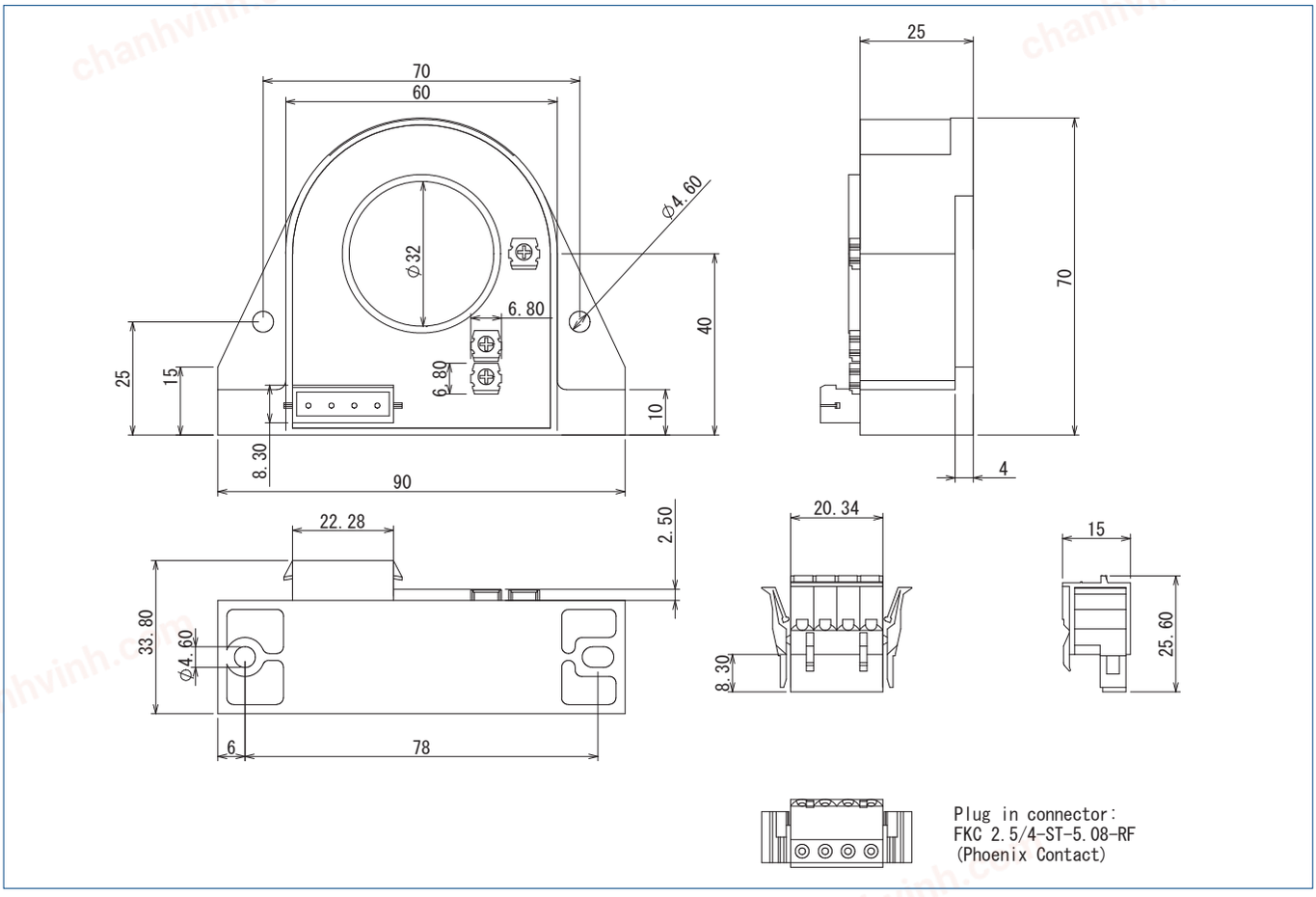

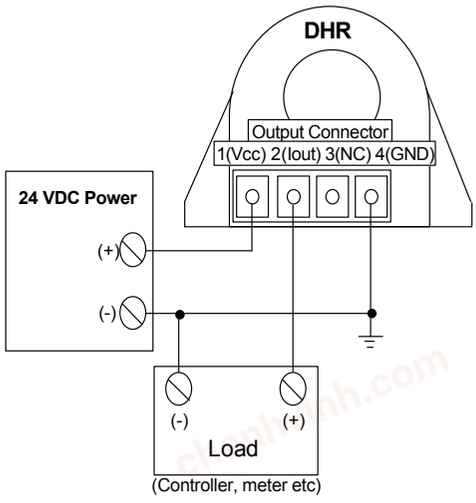

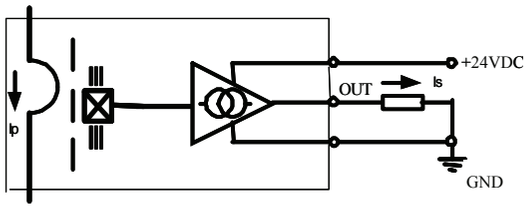

Connections

- Wires up to Ø 2 mm
- Female connector provided (spring terminal blocks)
- User-friendly spring-cage connection for no-tool direct conductor connection

Mechanical characteristics

- General tolerance ±1 mm
- Primary aperture Ø 32.0 mm
- Panel mounting 4 holes Ø 4.6 mm
- Distance between holes 70.0 mm & 78 mm (see above dimensions)

  For panel mounting, use M4 screws (not supplied) with appropriate length to panel´s thickness, and tighten to 0.75Nm +/-20% torque.

Remarks

- The temperature of the primary busbar can not exceed 90 °C.
- Dynamic performances are the best with a primary busbar completely filling the primary aperture.
- This is a standard model. For different versions (supply voltages, different outputs, bidirectional measurements...), please contact us.

LEM reserves the right to carry out modifications on its transducers, in order to improve them, without prior notice.