chanhvinh.com

AC Current transducer AT-B420L

I_{PN} = 5 .. 150 A

Split-core transducer for the electronic measurement of AC waveform currents, with galvanic isolation between the primary circuit (power) and the secondary circuit (measurement). 4-20 mA current output proportional to the RMS value of the primary current.



Electrical data

Primary nominal current rms I_{PN} (A.t.Rms)	Output current I_{OUT} (mA)	Type
5	4-20	**AT 5 B420L**
10	4-20	**AT 10 B420L**
20	4-20	**AT 20 B420L**
50	4-20	**AT 50 B420L**
100	4-20	**AT 100 B420L**
150	4-20	**AT 150 B420L**

R_L	Load resistance, with V_C = + 24 V DC [1]	< 600	Ω
V_C	Supply voltage (loop-powered)	+ 20 .. 30	V DC
I_{SL}	Output current limitation	< 30	mA
$\hat{I}_P$	Overload capability - continuous	120	% of I_{PN}
	- 1 min	150	% of I_{PN}

Performance data

X	Accuracy @ I_{PN}, T_A = 25°C (excluding offset)	< ± 1.5	% of I_{PN}
ε_L	Linearity error	< ± 0.5	%
I_{OE}	Electrical offset current, T_A = 25°C	4 ± 0.2	mA
t_r	Response time to 90% of I_{PN} step	< 100	ms
BW	Frequency bandwidth	50/60	Hz

General data

T_A	Ambient operating temperature	- 20 .. + 60	°C
T_S	Ambient storage temperature	- 20 .. + 85	°C
m	Mass	90	g
IPxx	Protection degree	IP40	

Note: [1] Max. Load Resistance vs. Supply Voltage

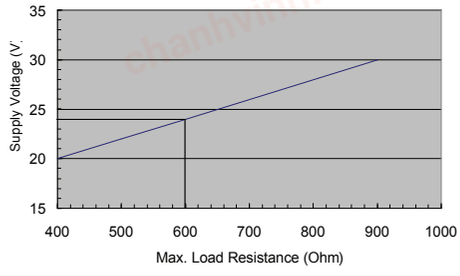

Features

- RMS output
- Loop-powered 4-20mA current output
- Split-core type
- Ø 16 mm sensing aperture for non-contact measurement
- Terminal output
- Isolated plastic case recognized according to UL 94-V0.

Advantages

- High isolation between primary and secondary circuits
- Compact case
- Cost-effective solution
- Easy installation

Applications

- ***Automation and Supervision***
  Current measurement for process regulation by distributed PLCs or remote control (e.g. SCADA software)
- ***Safety and Condition Monitoring***
  Load monitoring for protection systems and predictive maintenance (e.g. conveyers, pumps or HVAC motors)
- ***Energy management***
  Convenient connection to power consumption sub-meters

Application domain

- Energy and Automation

LEM reserves the right to carry out modifications on its transducers, in order to improve them, without prior notice.

chanhvinh.com

Current Transducer AT-B420L

Isolation characteristics

V_b	Rated isolation voltage rms [2]	300	V
	with IEC 61010-1 standards and following conditions:		
	- Reinforced isolation		
	- Over voltage category CAT III		
	- Pollution degree PD2		
	- Heterogeneous field		
V_d	Rms voltage for AC isolation test [3], 50Hz, 1min.	3.5	kV
dCp	Creepage distance	6	mm
dCl	Clearance distance	6	mm
CTI	Comparative tracking index (Group I)	600	

Notes: [2] If insulated cable is used for the primary circuit, the voltage category could be improved according to the primary cable insulation category (please refer to the cable manufacturer's indications)

[3] between primary (completely filling the hole) and secondary.

Safety and warning notes

In order to guarantee safe operation of the transducer and to be able to make proper use of all features and functions, please read these instructions thoroughly!
Safe operation can only be guaranteed if the transducer is used for the purpose it has been designed for and within the limits of the technical specifications.
Ensure you get up-to-date technical information that can be found in the latest associated datasheet under www.lem.com.



Caution! Risk of danger

Ignoring the warnings can lead to serious injury and/or cause damage!
The electric measuring transducer may only be installed and put into operation by qualified personnel that have rceived an appropriate training.
The corresponding national regulations shall be observed during installation and operation of the transducer and any electrical conductor.
The transducer shall be used in electric/electronic equipment with respect to applicable standards and safety rquirements and in accordance with all the related systems and components manufacturers' operating instructions.



Caution! Risk of electrical shock

When operating the transducer, certain parts of the module may carry hazardous live voltage (e.g. primary conductor, power supply).
The user shall ensure to take all measures necessary to protect against electrical shock.
The transducer is a built-in device containing conducting parts that shall not be accessible after installation.
A protective enclosure or additional insulation barrier may be necessary.
The transducer shall not be put into operation if the jaw opening is open (split core version) or the installation is not completed.
Installation and maintenance shall be done with the main power supply disconnected except if there are no hazardous live parts in or in close proximity to the system and if the applicable national regulations are fully observed.

Safe and trouble-free operation of this transducer can only be guaranteed if transport, storage and installation are carried out correctly and operation and maintenance are carried out with care.

chanhvinh.com

Dimensions AT-B420L (in mm. 1 mm = 0.0394 inch)

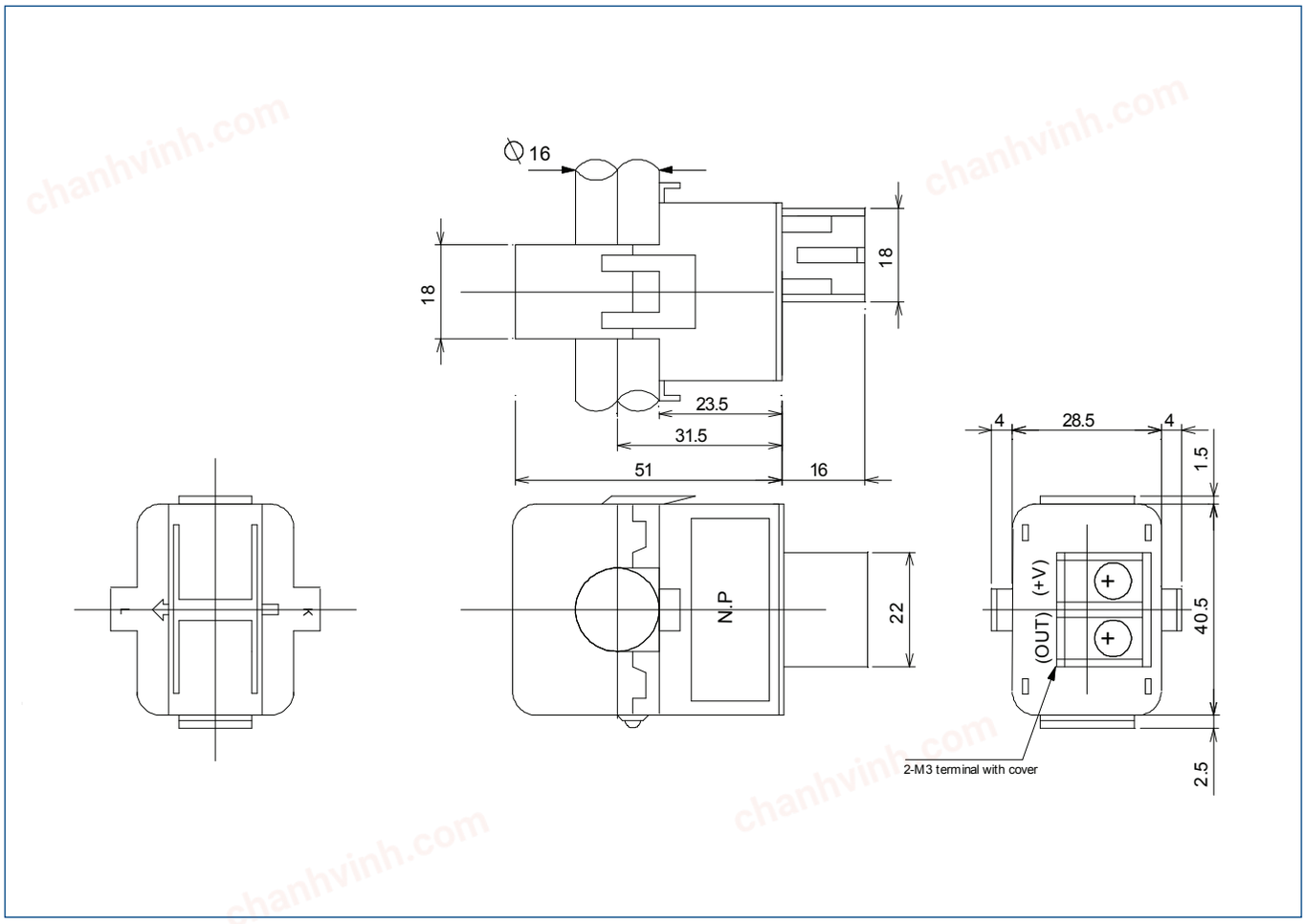

Mechanical characteristics

- General tolerance ± 1 mm
- Primary aperture Ø 16 mm
- Fastening Cable tie

Remarks

- ATTENTION: contact areas (air gap) must be kept clean (particle free) to ensure proper performance

Connections

- Wires up to 2 mm Ø

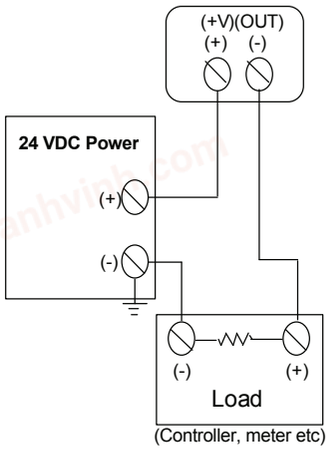

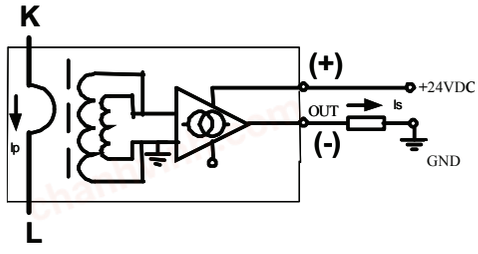

LEM reserves the right to carry out modifications on its transducers, in order to improve them, without prior notice.