chanhvinh.com

PRODUCT DATASHEET
Strada-Forward series

last update 24/4/2013

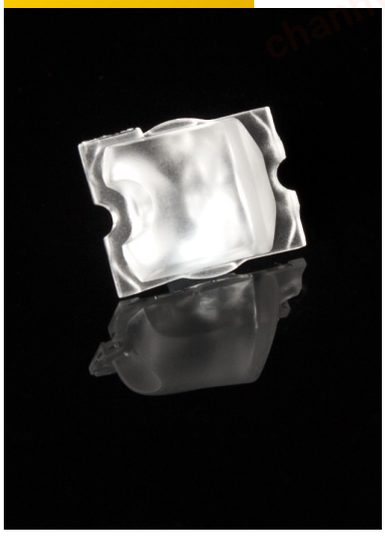

Ordering number	**CA12050**			
Description	**1**			
Family	Strada-Forward		FWHM	Asym degrees
Type	Assembly		Efficiency	85 %
LED	3535 Ceramic (LEMWA32)	2W	cd/lm	0.500
Color	Clear		Gerber File	Available
Diameter	15.4 x 19.6 mm			
Height	8.35 mm			
Style	Rectang			http://www.ledil.fi/Strada-F_Fully_Asymmetrical_Forward_Throv
Optic Material	PMMA			
Holder Material	-			
Fastening	-			
Status	Ready			

NOTE: The typical divergence will be changed by different color, chip size and chip position tolerance. The typical total divergence is the full angle measured where the luminous intensity is half of the peak value.

Ledil Oy
Salorankatu 10
24240 SALO
Finland

http://www.ledil.com
email: ledil@ledil.com
FAX: +358-2-733 8001

chanhvinh.com

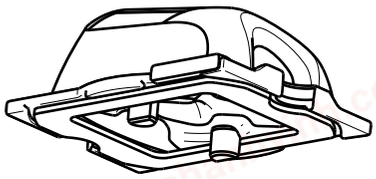

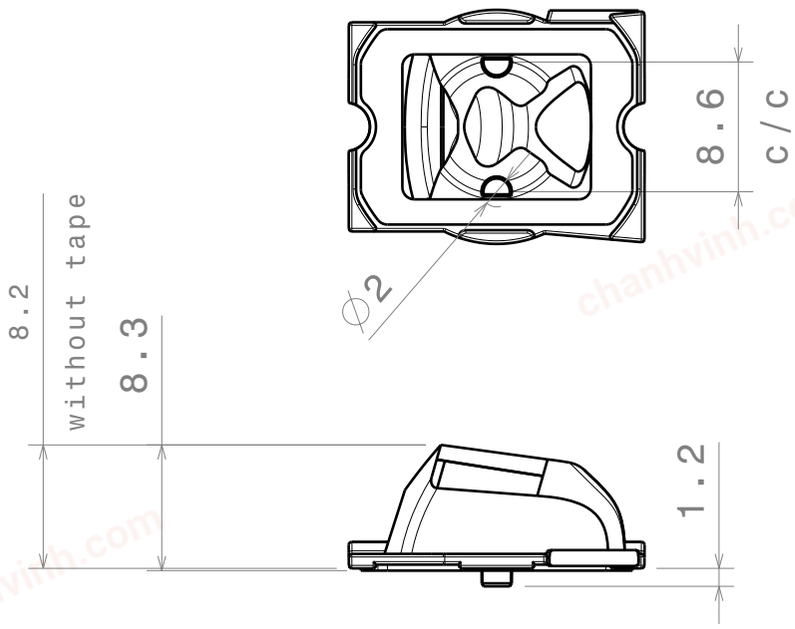

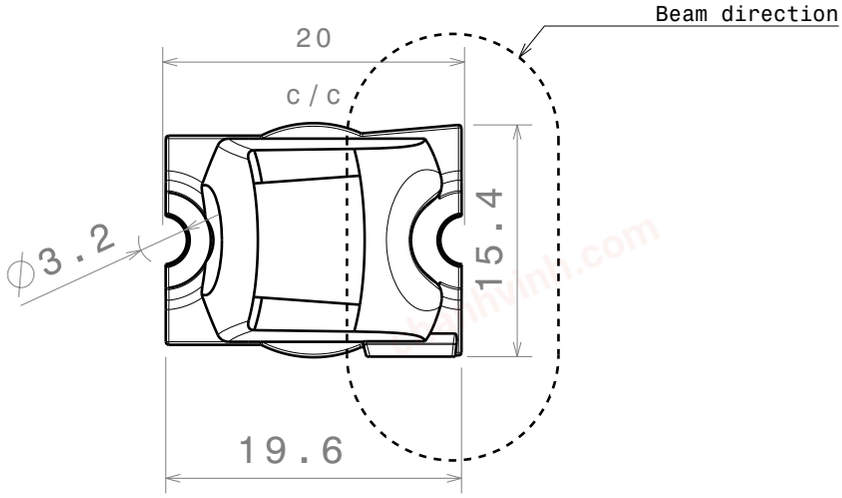

MATERIALS
Lens: PMMA
Tape(optional): PU Foam

This drawing is our property.
It can't be reproduced
or communicated without
our written agreement.

LEDiL

DRAWN BY ah	DATE 3.7.2012	DRAWING TITLE: Datasheet Strada-FT-Tape series assy			
CHECKED BY sn	DATE 3.7.2012	SIZE A4	DRAWING NUMBER		REV 2
DESIGNED BY hh	DATE 15.3.2011	SCALE 2:1	WEIGHT(g)		SHEET 1/1

chanhvinh.com

LEDiL Oy CA12050_STRADA-FT_(LG3535_2W) Eff.84.9% / LDC (Linear)

Luminaire: LEDiL Oy CA12050_STRADA-FT_(LG3535_2W) Eff.84.9%
Lamps: 1 x LG3535_2W (97.3629lm@250mA)

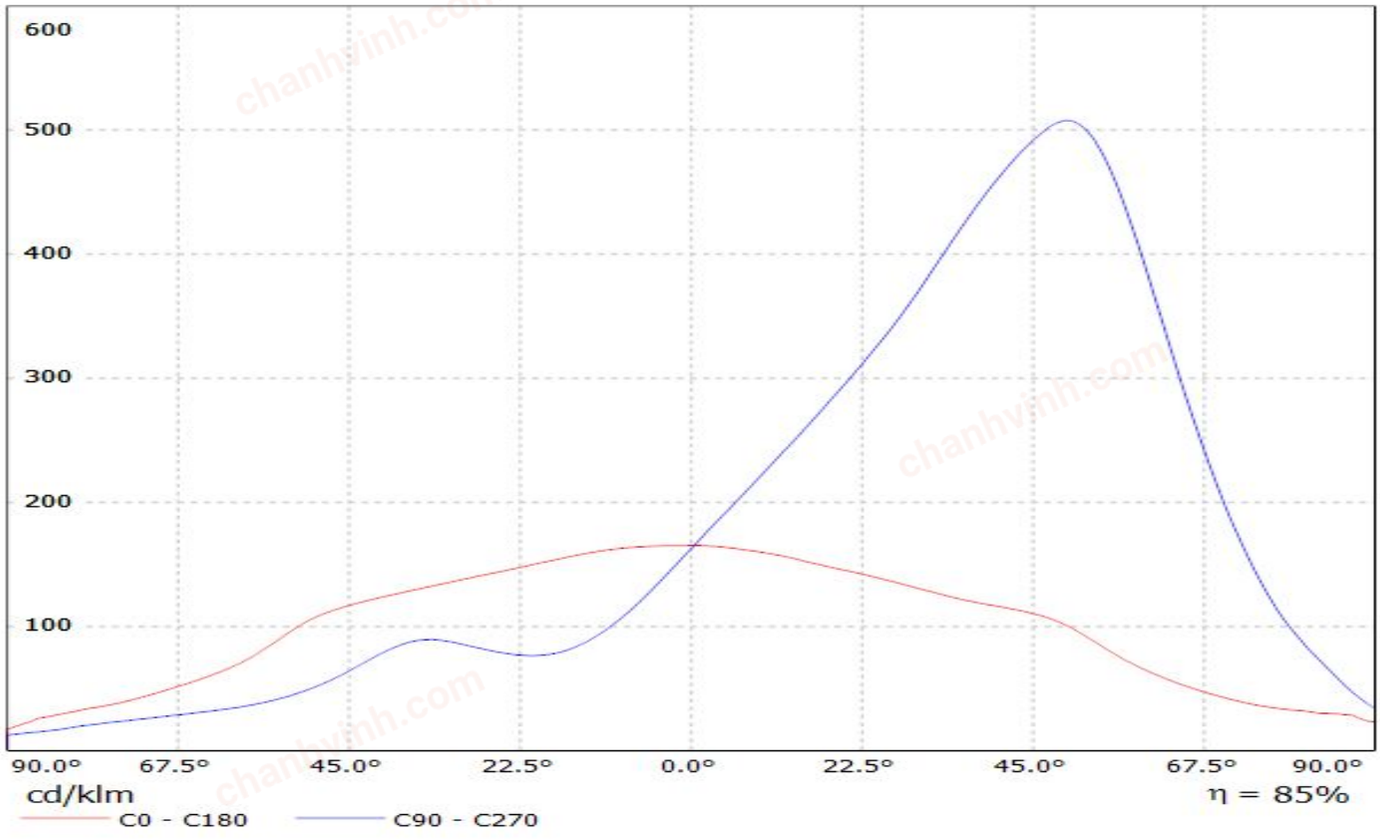

chanhvinh.com

chanhvinh.com

LEDiL Oy CA12050_STRADA-FT_(LG3535_2W) Eff.84.9% / LDC (Polar)

Luminaire: LEDiL Oy CA12050_STRADA-FT_(LG3535_2W) Eff.84.9%
Lamps: 1 x LG3535_2W (97.3629lm@250mA)

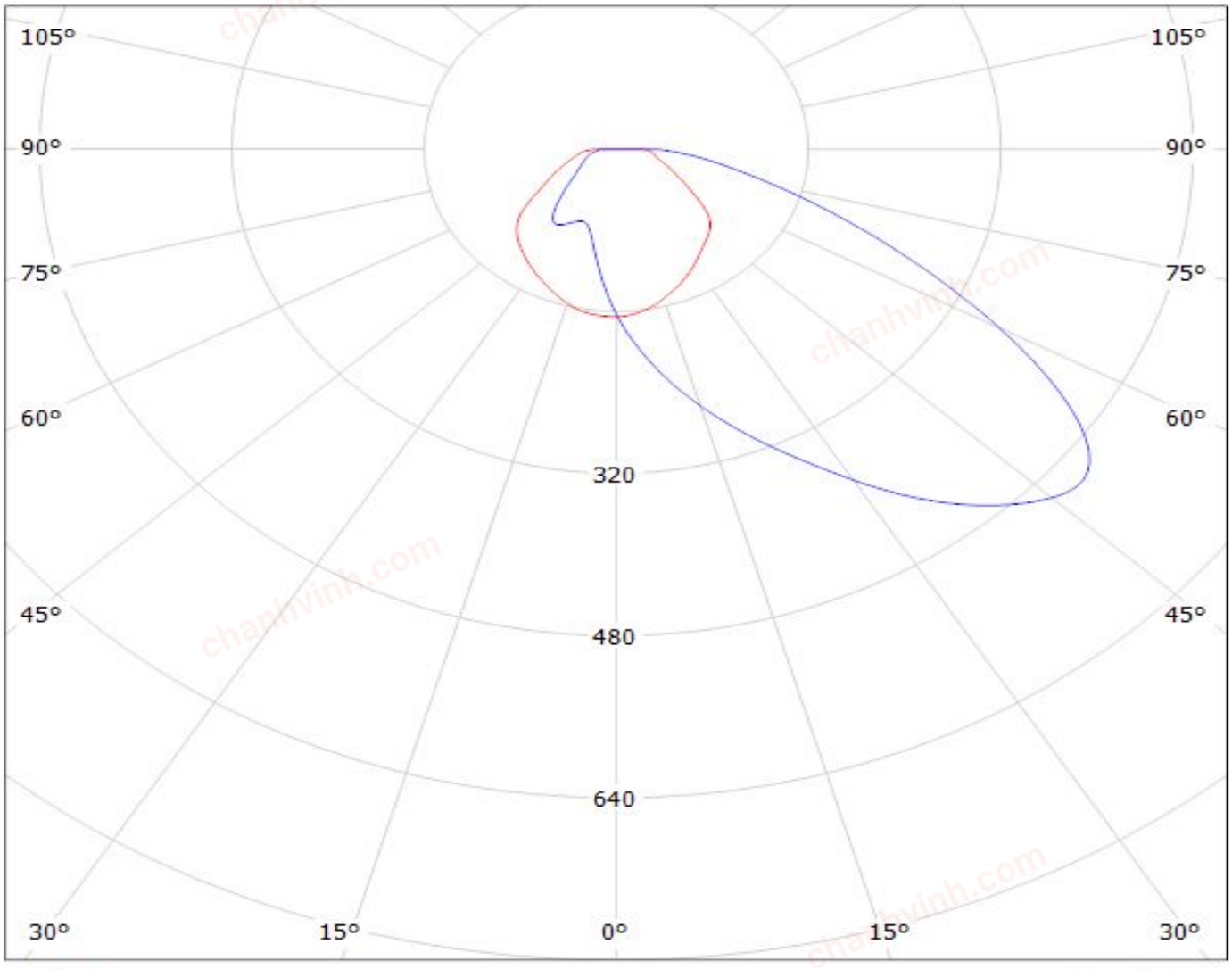

chanhvinh.com