chanhvinh.com

PRODUCT DATASHEET
Lena series
last update 18/9/2014



DETAILS

Product Number	C13088_LENA-STD-BASE-E30
Family	Lena
Type	Base part
Color	white
Diameter	58.7 mm
Height	11.89 mm
Style	round
Optic Material	
Holder Material	PC
Fastening	screw
Status	ready
ROHS Comliant	Yes
Date Updated	18/09/2014

OPTICAL PROPERTIES

LED	Viewing Angle	Light Beam	Effi-ciency	cd/lm	Connector
Soleriq E30	N/A deg		-	sim: 0.000	-

Ledil Oy
Salorankatu 10
24240 SALO, Finland

http://www.ledil.com
email: ledil@ledil.com
FAX: +358-2-733 8001

chanhvinh.com

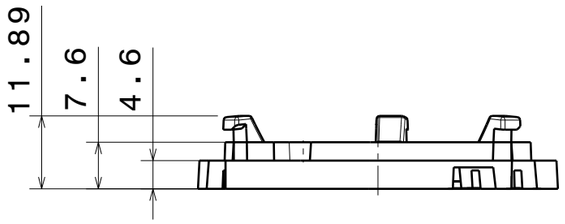

Front view

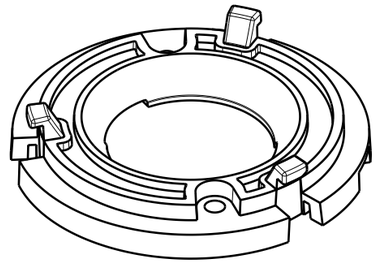

Isometric view

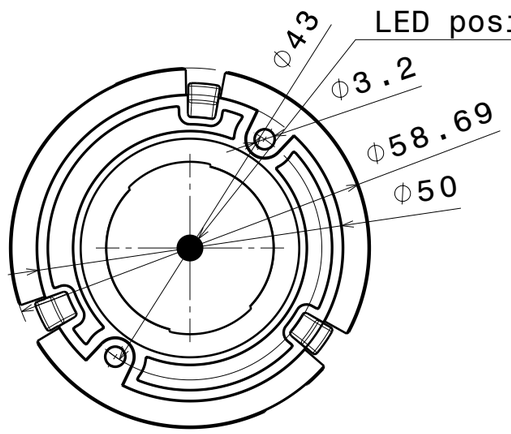

Top view

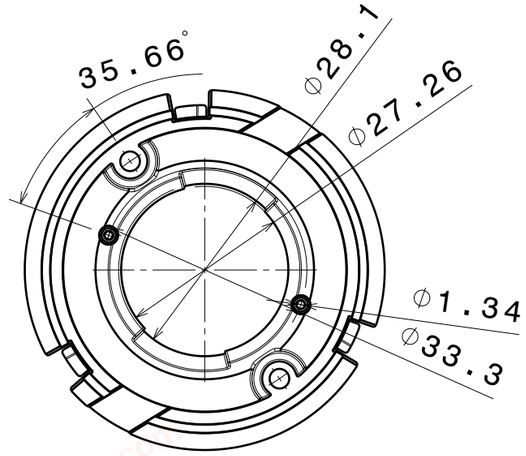

Bottom view

INDEX	PART NO	DESCRIPTION	MATERIAL	COLOUR
1	C13088	LENA-STD-BASE-E30	PC	white

Tolerances if not otherwise shown
According to DIN ISO 2768-1
Linear measures: class C
According to DIN ISO 2768-2
Form and position: class L

THIRD ANGLE PROJECTION:

This drawing is the property of LEDiL Oy. It may not be reproduced, copied or communicated without a written agreement with LEDiL Oy.

Ledil Oy
Salorankatu 10
FIN 24240 SALO
Finland

DRAWING TITLE
C13088_LENA-STD-BASE-E30

SIZE A3

PART NUMBER C13088

SCALE 1:1 | WEIGHT 8,08 g | SHEET 1/1

chanhvinh.com

NOTE: The typical divergence will be changed by different color, chip size and chip position tolerance. The typical total divergence is the full angle measured where the luminous intensity is half of the peak value.

GENERAL INFORMATION

- Product series especially designed & optimized for series of LEDs.
- Special care taken to make light distribution as uniform as possible.

Note! Due to use of high power COB's with this product, special attention to proper thermal design is highly recommended. LEDiL has no liability for direct, indirect or consecutive damages arising from the LEDiL products being used outside of the recommended temperature range.