chanhvinh.com

PRODUCT DATASHEET
Mirella series
last update 21/5/2015

DETAILS



Product Number	C13083_PF-SOCKET
Family	Mirella
Type	Base part
Color	white
Diameter	38 mm
Height	5.5 mm
Style	round
Optic Material	
Holder Material	PC
Fastening	screw, tape, glue
Status	ready
ROHS Comliant	Yes
Date Updated	21/05/2015

OPTICAL PROPERTIES

LED	Viewing Angle	Light Beam	Effi-ciency	cd/lm	Connector
	N/A deg		-	sim: 0.000	-

Ledil Oy
Salorankatu 10
24240 SALO, Finland

http://www.ledil.com
email: ledil@ledil.com
FAX: +358-2-733 8001

chanhvinh.com

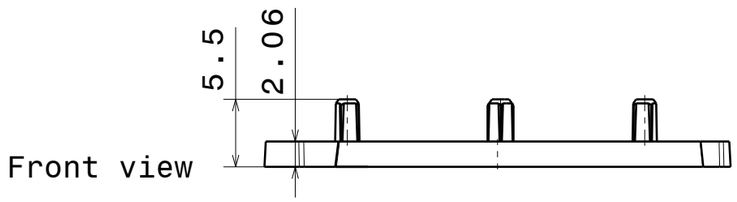

Front view

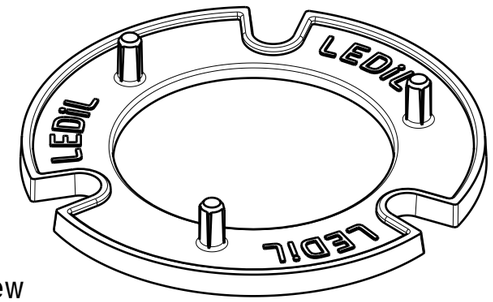

Isometric view

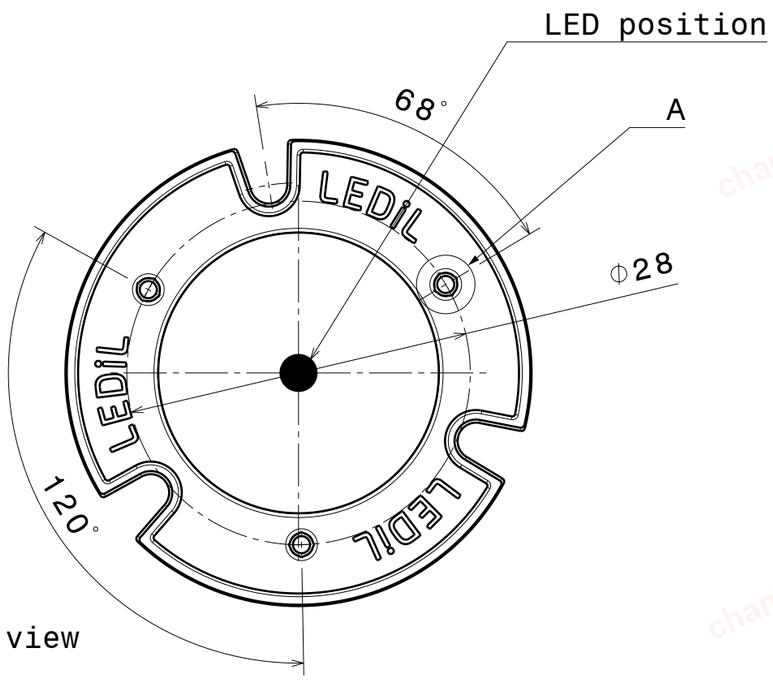

Top view

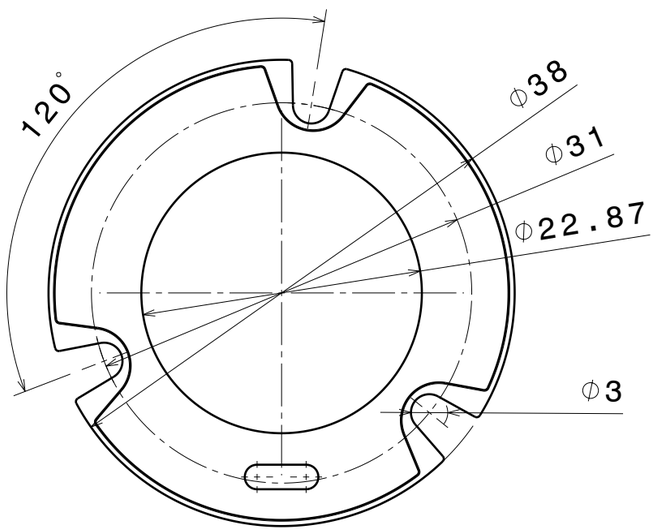

Bottom view

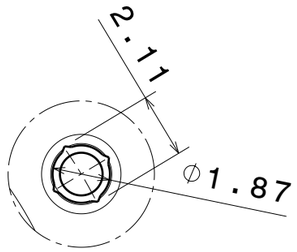

Detail A
Scale: 5:1

INDEX	PART NO	DESCRIPTION	MATERIAL	COLOUR
1	C13083	PF-SOCKET	PC	white

Tolerances if not otherwise shown
According to DIN ISO 2768-1
Linear measures: class C
According to DIN ISO 2768-2
Form and position: class L

THIRD ANGLE PROJECTION:

This drawing is the property of LEDiL Oy. It may not be reproduced, copied or communicated without a written agreement with LEDiL Oy.

Ledil Oy
Salorankatu 10
FIN 24240 SALO
Finland

DRAWING TITLE
C13083_PF-SOCKET

SIZE A3 | PART NUMBER C13083

SCALE 2:1 | WEIGHT 1,15 g | SHEET 1/1

chanhvinh.com

NOTE: The typical divergence will be changed by different color, chip size and chip position tolerance. The typical total divergence is the full angle measured where the luminous intensity is half of the peak value.