chanhvinh.com

Hour meters / timers, electromechanical

Timers with DIN dimensions | **DIN counter for panel mount / DIN rail housing, 48 x 48 mm** | **H57 / AH57**



The hour meters H57, H57.55, H57.72 and AH57 feature a very high shock resistance.
These panel / DIN rail mount counters have a reduced mounting depth. They can be used in many different fields of application.
These non-resettable counters are extremely tamper-proof.

5 Jahre / years Gewährleistung / warranty
Made in Germany by Kübler

Characteristics

- 7 or 8-digit hour meter.
- High shock and impact resistance.
- Without reset, small mounting depth.
- Magnified large figures.
- Protection IP52 (optional IP65), suitable for any mounting position.
- UL-approved.
- Various front bezel sizes
  - H57 48 x 48 mm
  - H57.55 55 x 55 mm
  - H57.72 72 x 72 mm
  - AH57 48 x 48 mm for DIN rail

Benefits

- 5 years guarantee. [1)]
- High reliability: for a better sale of your final product.
- Data retention in case of power failure.
- Long service life.

Applications

General time measurement, maintenance intervals for measuring instruments (respiration units, oxygen, dialysis), small appliances, UV lamps, display panels in vehicles

Type series

Description	*Mounting*	*Front bezel*	*Type*
Standard DIN timer	clip mounting, on rear	48 x 48 mm [1.89 x 1.89“]	**H57**
Standard DIN timer	clip mounting, on rear	55 x 55 mm [1.97 x 1.97“]	**H57.55**
Standard DIN timer	clip mounting, on rear	72 x 72 mm [2.83 x 2.83“]	**H57.72**
Base mount timer	DIN rail 35 mm [1.38“] acc. to DIN EN 50022		**AH57**

1) When used as specified in the technical data

© Fritz Kübler GmbH, subject to errors and changes. 11/2023

chanhvinh.com

Timers with DIN dimensions | DIN counter for panel mount / DIN rail housing, 48 x 48 mm | H57 / AH57

Accessories / Mounting examples

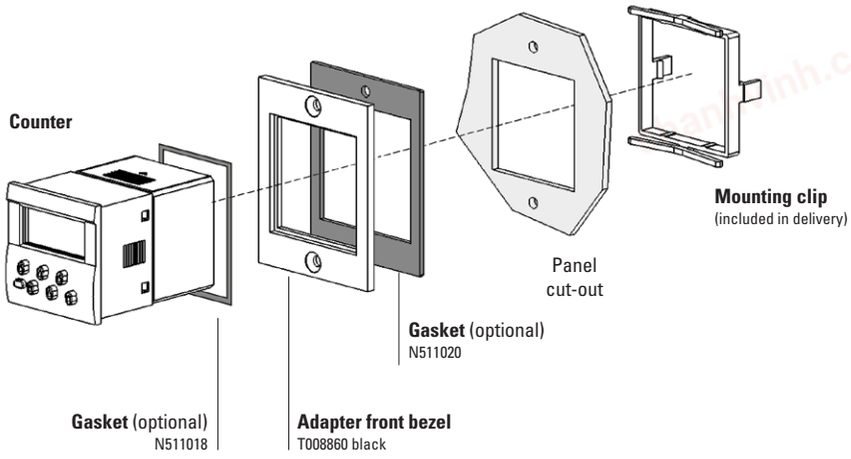

		Type / size	Description		Order no.	suitable gasket
Adapter front bezel		**55 x 55 mm [2.17 x 2.17]**	for cut-out 50 x 50 mm [1.97 x 1.97"] or ø 50,5 mm [1.99"] to cut-out 45 x 45 mm [1.77 x 1.77"]	grey black	**T008170** **T008171**	**N511017**
		**55 x 55 mm [2.17 x 2.17]**	for cut-out 50 x 50 mm [1.97 x 1.97"] to cut-out 45 x 45 mm [1.77 x 1.77"]	black	**T008853**	**N511004**
		**60 x 75 mm [2.36 x 2.95]**	for cut-out 50 x 50 mm [1.97 x 1.97"] to cut-out 45 x 45 mm [1.77 x 1.77"]	black	**T008860**	**N511020**
		**72 x 72 mm [2.83 x 2.83]**	for cut-out 68 x 68 mm [2.68 x 2.68"] to cut-out 45 x 45 mm [1.77 x 1.77"]	grey black Mating clip	**T008176** **T008177** **T009420**	**N511016**
		**ø 72 mm [2.83]**	for cut-out ø 60 mm [2.36"] to cut-out 45 x 45 mm [1.77 x 1.77"]	black	**N510226**	–
Gasket counter			48 x 48 mm (for installation in adapter front bezel)		**N511018**	
Mounting frame		**cut-out 50 x 50 mm [2.36 x 2.36]**	for snap-on mounting on 35 mm [1.38"] top-hat DIN rail	chromated	**G300003**	
Base mount socket				black	**G008040**	

© Fritz Kübler GmbH, subject to errors and changes. 11/2023

chanhvinh.com

Hour meters / timers, electromechanical

Timers with DIN dimensions | **DIN counter for panel mount / DIN rail housing, 48 x 48 mm** | **H57 / AH57**

Technical data

Electrical connection		screw terminals (tightening torque max. 0.8 Nm) wire entry from behind, for ø 2.5 mm² [AWG13]
Power consumption	10 ... 30 V DC	approx. 500 mW
	100 ... 130 V DC	approx. 750 mW
	20 ... 30 V AC, 50 Hz	approx. 0.3 VA
	42 ... 48 V AC, 50 Hz	approx. 0.25 VA
	100 ... 130 V AC, 50 Hz	approx. 0.6 VA
	187 ... 264 V AC, 50 Hz	approx. 1.2 VA
	360 ... 440 V AC, 50 Hz	approx. 1.65 VA
Rated voltages	AC (50 or 60 Hz)	20 ... 30 V, 42 ... 48 V, 100 ... 130 V, 187 ... 264 V, 360 ... 440 V
	DC	10 ... 30 V, 36 ... 80 V, 100 ... 130 V
On time		100 %
Number of digits	7 at AC	99999.99 h
	8 at DC	999999.99 h
Count mode		adding
Height of figures		4 mm [0.16“]
Color of figures		white and red on black
Operating temperature		-15 °C ... +50 °C [+5 °F ... +122 °F] (non-condensing)
Storage temperature		-40 °C ... +85 °C [-40 °F ... +185 °F]
Relative humidity at +30 °C [+86 °F]		≤ 80 % (non-condensing)
Altitude		up to 2000 m [6562‘]
Mounting position		any
Protection		IP52, DIN 40050 (front side)
Device safety	designed to	EN 61010 part 1
	protection class	2
	application area	pollution level 2
Housing		plastic PC (Polycarbonate)
Accuracy	AC	supply frequency + 30 ms
	DC	< 0.003 % (at 24 h)
Weight	H57	approx. 48 g [1.69 oz]
	base mount socket no. 48	36 g [1.27 oz]
	slip-on bezel 55	8 g [0.28 oz]
	slip-on bezel 72	13 g [0.46 oz]
Operating indicator of the running time meter	AC	fast rotating wheel with red dashes
	DC	1/100 h display turns continuously by 1 digit in 36 s
Test voltage		2000 V AC, 50 Hz for AC counters

Options

Housing color	grey	Art. no. 3.22X.400.XXX
Timer H57.55 mounted with adapter front bezel 55 x 55 mm [2.17 x 2.17“]		Art. no. 3.221.XXX.XXX
Timer H57.72 mounted with adapter front bezel 72 x 72 mm [2.83 x 2.83“]		Art. no. 3.222.XXX.XXX
Electrical connection		
flat pin 0.8 x 6.3 mm [0.031 x 0.25“]		Art.-No.: 3.228.401.XXX
IP65 version, welded front cover		
	H57	Art. no. 3.220.XXX.XXX.422
	H57.55	Art. no. 3.221.XXX.XXX.423
	H57.72	Art. no. 3.222.XXX.XXX.424
Required gaskets		
between the counter and the bezel		
	H57	N511018
Gasket set	H57.55	N511018 + N511017
	H57.72	N511018 + N511016
(with the IP65 version, the gasket is included in the delivery)		
Further voltages on request		
Counter with cable inlet from underneath, screw fixing from rear		Art. no. 3.220.401.XXX.044

Approvals

UL compliant in accordance with		File no. E128604 [1)]
CE compliant in accordance with		
	EMC Directive	2014/30/EU
	RoHS Directive	2011/65/EU
	Low Voltage Directive	2014/35/EU

1) The version 360 ... 440 V AC is not UL listed.

© Fritz Kübler GmbH, subject to errors and changes. 11/2023

chanhvinh.com

Hour meters / timers, electromechanical

Timers with DIN dimensions | DIN counter for panel mount / DIN rail housing, 48 x 48 mm | H57 / AH57

Standard DIN timer
clip mounting, on rear
Type H57



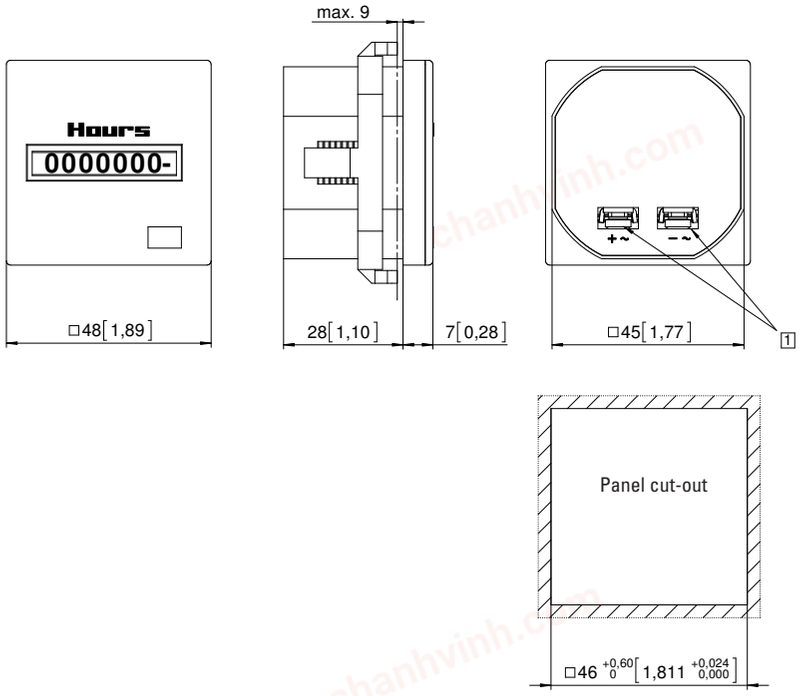

1 Screw terminal with flat pin x 6.3 [0.031 x 0.25]

Type	Display	Voltage	Art. no. 10 ... 30 V	20 ... 30 V	42 ... 48 V	100 ... 130 V	187 ... 264 V	360 ... 440 V
H57	7 digits	AC (50 Hz)		**3.220.401.071** 1)	**3.220.401.072**	**3.220.401.074** 1)	**3.220.401.075** 1)	**3.220.401.079**
	7 digits	AC (60 Hz)		**3.220.401.081** 1)	**3.220.401.082**	**3.220.401.084** 1)	**3.220.401.085** 1)	**3.220.401.089**
	8 digits	DC	**3.220.401.351** 1)			**3.220.401.381**		
Further stock types:			3.220.401.075.422 187... 264 V AC, IP65 3.220.401.351.422 10 ... 30 V DC, IP65					

Base mount timer
DIN rail mount 35 [1.38] acc. to DIN EN 50022
Type AH57



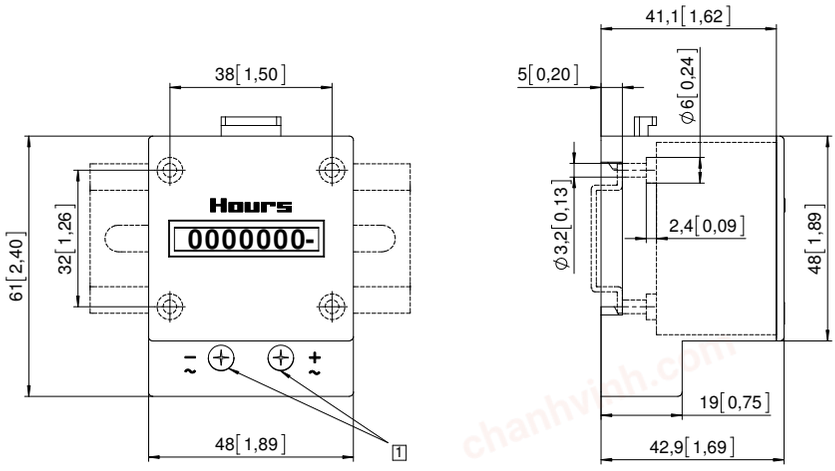

1 Screw terminals

Type	Display	Voltage	Art. no. 10 ... 30 V	20 ... 30 V	42 ... 48 V	100 ... 130 V	187 ... 264 V	360 ... 440 V
AH57	7 digits	AC (50 Hz)		**3.223.401.071**	**3.223.401.072**	**3.223.401.074** 1)	**3.223.401.075** 1)	**3.223.401.079**
	7 digits	AC (60 Hz)		**3.223.401.081**	**3.223.401.082**	**3.223.401.084** 1)	**3.223.401.085** 1)	**3.223.401.089**
	8 digits	DC	**3.223.401.351** 1)			**3.223.401.381**		

Dimensions in mm [inch]

1) Stock types

© Fritz Kübler GmbH, subject to errors and changes. 11/2023