chanhvinh.com

Strain-gauge controllers

LED strain-gauge controllers	For strain-gauge inputs (AC+DC)	Codix 566



The process controller Codix 566 with totalizer function displays measured values from all common strain-gauge inputs in high resolution. In addition it can monitor and control 2 limit values.

These fast displays set new standards when it comes to user friendliness. Their easy-to-read 14-segment LED display, easy-to-understand running help texts and a practical quick-start guide eliminate the need to wade through time-consuming full instruction manuals.

With optional analog output.

DC 10 ... 30 V	AC 100 ... 240 V	LEDs	Prog	mV	Tara	Σ		min / max	2	AC/DC
Supply voltage		14-segment LED display	Menu-driven programming	Display linearization	Tare function	Totalizer function	Strain-gauge input	Min / Max value detection	2 limit values	Galvanic isolation
15 bit	-20°... +65°C	000000 DIN 96x48	000000		mA, V					
Resolution	Temperature range	DIN front bezel	Installation in mosaic systems	Operation with gloves	Analog output optional					

User-friendly

- Practical quick-start guide for setting the parameters and operating the device.
- Help text as running text.
- Easy-to-read 14-segment LED, 6-digit display, 14 mm high.
- Simple programming via 4 keys on the front.
- One front key as well as 2 additional inputs can be programmed for specific applications.
- Customer-specific characteristic (linearization) curve via 12 control points for all measurement signal inputs.
- MIN/MAX memory function, individually resettable.

Powerful

- Sampling rate of 10 readings per second.
- Application-specific characteristic curves via 12 measurement points.
- Manual totalizer function for totalizing the measured values. Can be reset separately.
- 2 relay outputs (changeover contacts) for limit monitoring with hysteresis and ON/OFF delay function for current measured or totalizer values.
- Analog output for the current measured value, MIN-value, MAX-value or totalizer value.
- Auxiliary sensor supply voltage 10 V DC / 30 mA for powering 350 Ω bridges.
- Inputs and outputs galvanically isolated.
- Digital filter (first-order) for smoothing display fluctuation with unstable input signals.
- Tare function.

Order code

6.566 (a) . 010 (b) . X (c) 0 X (d)

a *Input type*
6 = Strain-gauge inputs [1]

b *Outputs*
0 = relays [1]

c *Supply voltage*
0 = 100 ... 240 V AC, ±10 % [1]
3 = 10 ... 30 V DC [1]

d *Further outputs (optional)*
0 = none [1]
9 = analog output [1] (only for DC version)

Delivery specification:
- Process device
- Mounting clip
- Gasket
- Instruction manual, multilingual
- 1 sheet of self-adhesive symbols
- Quick-start guide

Practical quick-start guide for setting the parameters and operating the device.

The guide can be affixed directly to the front of the unit and can be removed and re-applied as required.



1) Stock types.

© Fritz Kübler GmbH, subject to errors and changes. 03/2023

chanhvinh.com

LED strain-gauge controllers | For strain-gauge inputs (AC+DC) | Codix 566

Accessories / Mounting examples

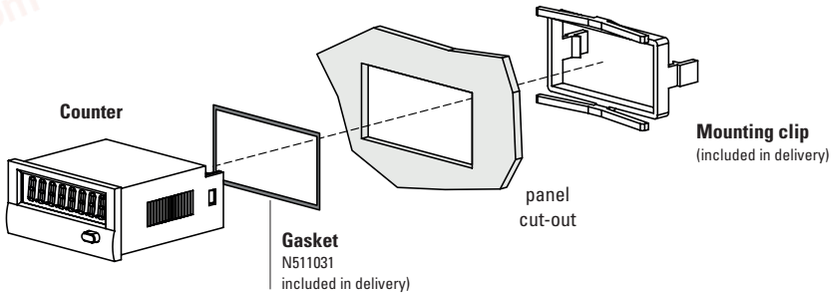

		Type / size	Description		Order no.	
Gasket counter			96 x 49 mm [3.78 x 1.93“]		**N511031**	
Mounting frame		**cut-out 92 x 45 mm [3.62 x 1.77“]**	for snap-on mounting on 35 mm [1.38“] top-hat DIN rail	grey	**G300005**	–
Screw terminal (Replacement part)			1 ... 7, pitch 3.81 1 ... 2, pitch 5.08	7 pin 2 pin	**N100387** **N100133**	
					incl. in delivery	

© Fritz Kübler GmbH, subject to errors and changes. 03/2023

chanhvinh.com

Strain-gauge controllers

LED strain-gauge controllers | For strain-gauge inputs (AC+DC) | Codix 566

Technical data

General technical data

Display	6-digit, 14 segment LED
Digit height	14 mm [0.55“]
Display range	-199999 … 999999, with leading zero blanking
Data retention	> 10 years, EEPROM
Operation	5 keys
Operating temperature	-20 °C ... +65 °C [-4°F ... +149°F] (non-condensing)
Storage temperature	-25 °C ... +75 °C [-13°F ... +167°F]
Relative humidity	93 % (non-condensing)
Altitude	up to 2000 m [6562’]

Electrical characteristics

Supply voltage	AC supply	100 ... 240 V AC / max. 9 VA 50 / 60 Hz, tolerance ±10 % ext. fuse protection: T 0.1 A
	DC supply	10 ... 30 V DC / max. 3.8 W with galvanic isolation and reverse polarity protection ext. fuse protection: T 0.4 A
Mains hum suppression		50 Hz or 60 Hz programmable
Sensor supply voltage	AC supply	24 V DC ±15 %, 30 mA 10 V DC ±1 %, 30 mA
	DC supply	10 V DC ±1 %, 30 mA
Device safety	designed to	EN 61010 part 1
	protection class	2 (front side)
	application area	pollution level 2
	overvoltage category	II

Mechanical characteristics

Housing	Panel mount housing to DIN 43700 RAL 7021
Dimensions	96 x 48 x 102 mm [3.78 x 1.89 x 4.02“]
Panel cut-out	92 +0.8 x 45 +0.6 mm [3.62 +0.032 x 1.77 +0.024“]
Installation depth	approx. 92 mm [3.62“] incl. terminals
Weight	approx. 180 g [6.34 oz]
with analog output	200 g [7.06 oz]
Protection	IP65 (front side)
Housing material	Polycarbonate UL94 V-2
Vibration resistance acc. to EN 60068-2-6	10 - 55 Hz / 1 mm / XYZ 30 min in each direction
Shock resistance acc. to EN 60068-2-27	100 G / 2 ms / XYZ 3 times in each direction
acc. to EN 60068-2-29	10 G / 6 ms / XYZ 2000 times in each direction
Connections supply voltage and output	Plug-in screw terminal, 8-pin, RM 5.00, core ø max. 2.5 mm² [AWG 13]
Connections signal and control inputs	Plug-in screw terminal, 9-pin, RM 3.50, core ø max. 1.5 mm² [AWG 15]

Control inputs MPI 1 / MPI 2

Quantity		2 optocouplers
Function		programmable
Switching levels	LOW	< 2 V
	HIGH	> 4 V (max. 30 V)
Pulse length		> 100 ms

Measuring signal inputs

Sampling rate	10 readings/sec
Input resistance	1 MΩ
Max. measuring signal range	approx. ±35 mV
Max. voltage	±10 V

Sensitivity ranges: 3.3 – 3.0 – 2.0 mV / V

Resolution	±15 bit
Measuring accuracy at 23 °C (% of range)	typ. 0.05 % / max. ≤ 0.1 %
Temperature drift	< 100 ppm/$K_{Ambient}$

Sensitivity ranges: 1.5 – 1.0 mV / V

Resolution	±14 bit
Measuring accuracy at 23 °C (% of range)	typ. 0.1 % / max. ≤ 0.2 %
Temperature drift	< 100 ppm/$K_{Ambient}$

Analog output (optional - only for DC version)

Output ranges		0 (4) ... 20 mA / 0 (2) ... 10 V
Load	current output	≤ 500 Ω
	voltage output	≥ 2000 Ω
Resolution		15 bit
Update time		100 ms (basic device measuring rate)
Temperature drift		≤ 100 ppm/$K_{Ambient}$
Accuracy		±0.1 % of the output range high value
Output ripple		≤ 10 mV
Isolation voltage		500 V AC for 1 minute or 1 kV DC for 1 second

Alarm outputs

Relays		changeover contacts
Switching voltage	max.	250 V AC / 125 V DC
	min.	5 V AC / 5 V DC
Switching current	max.	5 A AC / 5 A DC
	min.	10 mA DC
Switching capacity	max.	1250 VA / 150 W
Pull-in time		approx. 10 ms

Approvals

UL compliant in accordance with	File no. E128604
CE compliant in accordance with	
EMC Directive	2014/30/EU
RoHS Directive	2011/65/EU
Low Voltage Directive	2014/35/EU
UKCA compliant in accordance with	
EMC Regulations	S.I. 2016/1091
RoHS Regulations	S.I. 2012/3032
Low Voltage Regulations	S.I. 2016/1101

© Fritz Kübler GmbH, subject to errors and changes. 03/2023

chanhvinh.com

Strain-gauge controllers

LED strain-gauge controllers | For strain-gauge inputs (AC+DC) | Codix 566

Terminal assignment

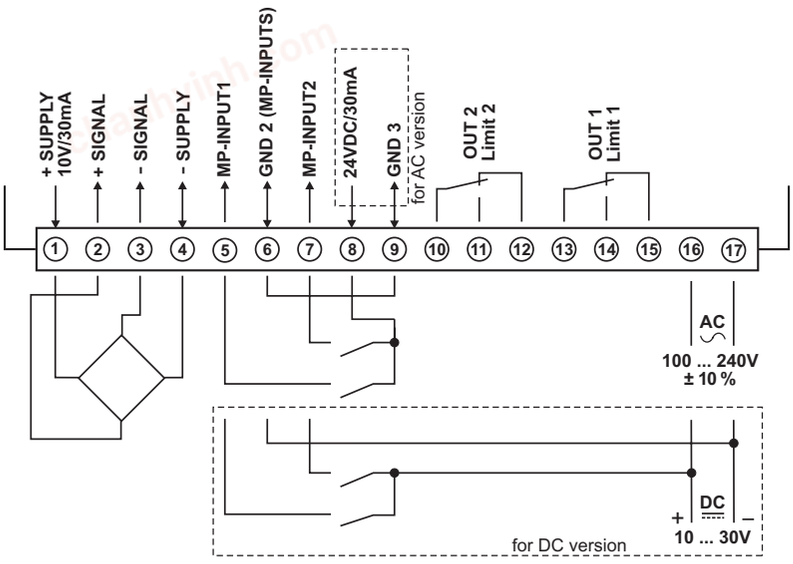

Rear side view

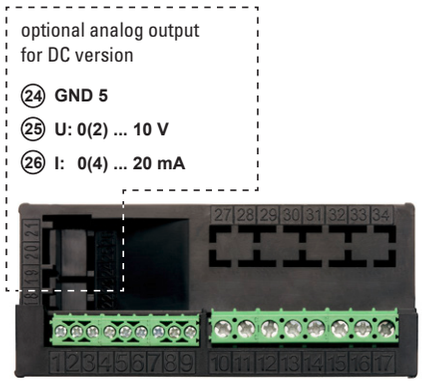

Block diagram

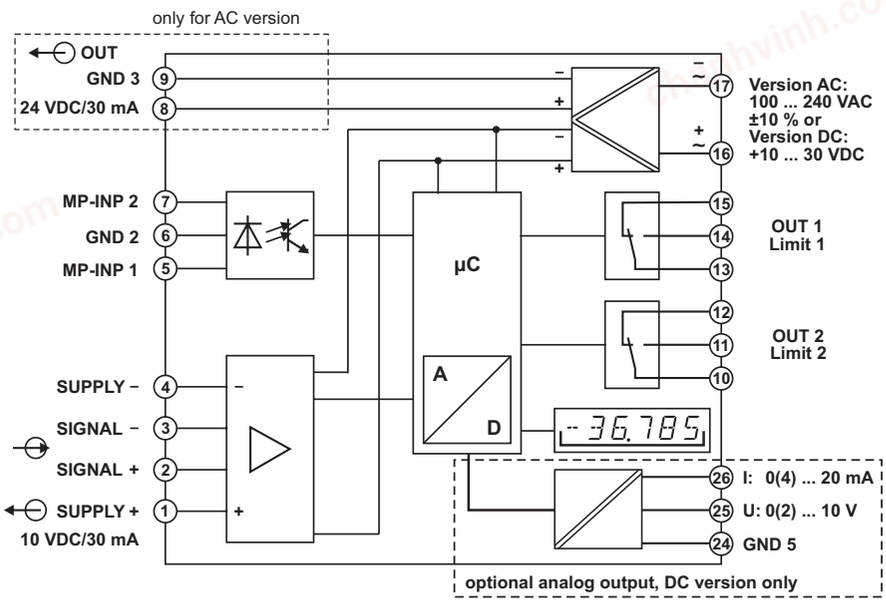

© Fritz Kübler GmbH, subject to errors and changes. 03/2023

chanhvinh.com

LED strain-gauge controllers | **For strain-gauge inputs (AC+DC)** | **Codix 566**

Dimensions

Dimensions in mm [inch]

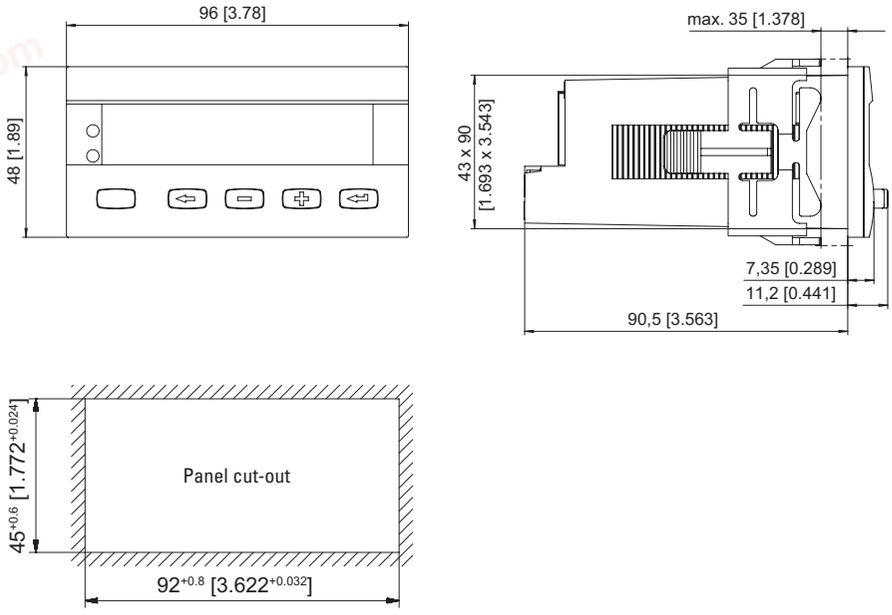

© Fritz Kübler GmbH, subject to errors and changes. 03/2023