chanhvinh.com

Kingbright

HOUSING FOR LED LAMP

Part Number:RTF-1090

Features

- Suitable for back panel illumination, circuit board indicator, LED indicator.
- Housing UL rating:94V-0.
- Housing material: type 66 nylon.
- RoHS compliant.

Package Dimensions

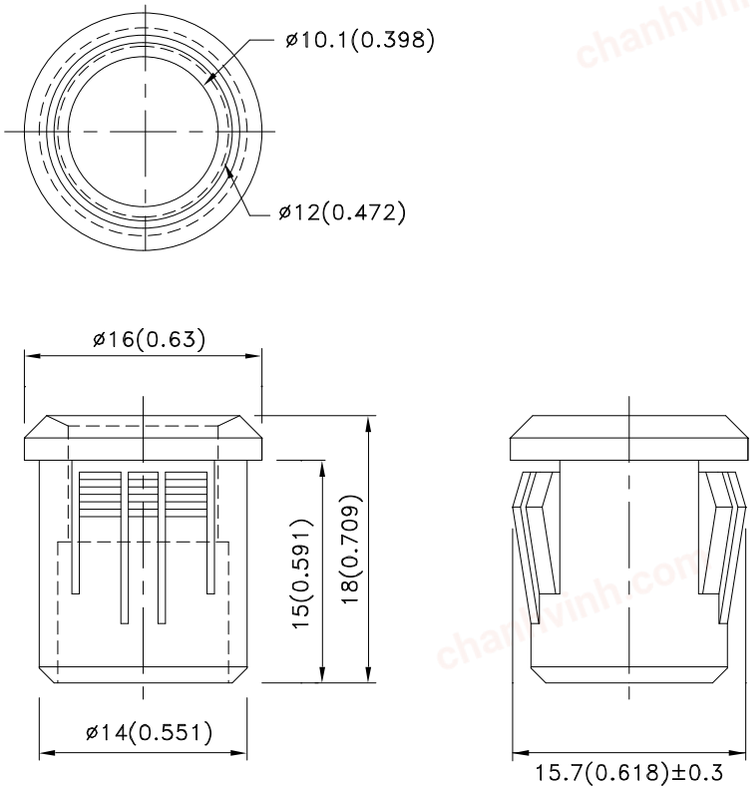

Notes:
1. All dimensions are in millimeters (inches).
2. Tolerance is ±0.25(0.01") unless otherwise noted.
4. The specifications, characteristics and technical data described in the datasheet are subject to change without prior notice.

chanhvinh.com

Kingbright

PACKING & LABEL SPECIFICATIONS **RTF-1090**

