chanhvinh.com

Kingbright

T-1 (3mm) RIGHT ANGLE LED INDICATOR

P/N: L-710A8EW/1ID HIGH EFFICIENCY RED

Features

- I.C. COMPATIBLE.
- BLACK CASE ENHANCES CONTRAST RATIO.
- WIDE VIEWING ANGLE.
- HIGH RELIABILITY LIFE MEASURED IN YEARS.
- UL RATING : 94V-0.
- HOUSING MATERIAL: TYPE 66 NYLON.
- RoHS COMPLIANT.

Description

The High Efficiency Red source color devices are made with Gallium Arsenide Phosphide on Gallium Phosphide Orange Light Emitting Diode.

Package Dimensions

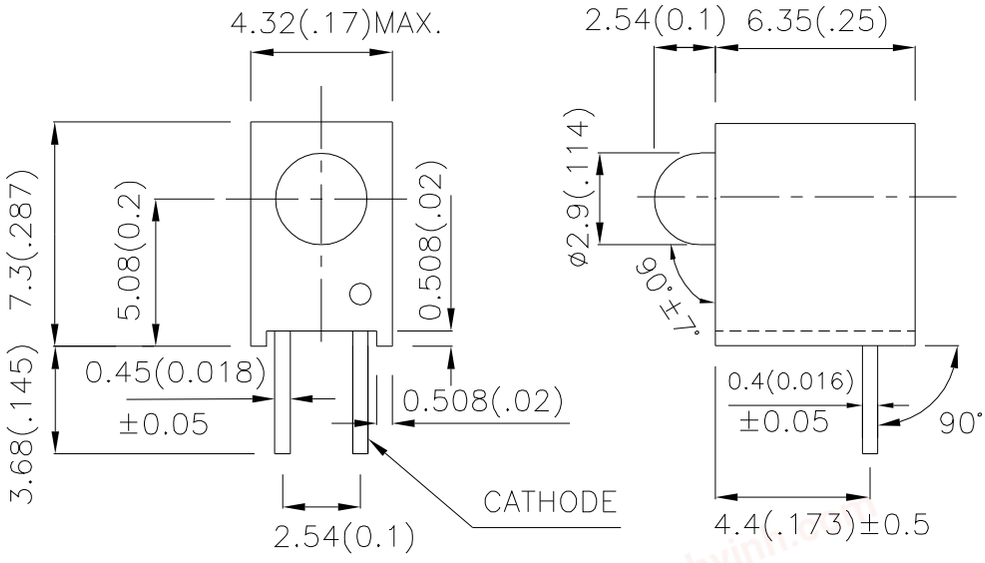

Notes:
1. All dimensions are in millimeters (inches).
2. Tolerance is ±0.25(0.01") unless otherwise noted.
3. Lead spacing is measured where the leads emerge from the package.
4. Specifications are subject to change without notice.

chanhvinh.com

Kingbright

Selection Guide

Part No.	Dice	Lens Type	Iv (mcd) @ 10mA		Viewing Angle
			Min.	Typ.	2 θ 1/2
L-710A8EW/1ID	HIGH EFFICIENCY RED (GaAsP/GaP)	RED DIFFUSED	12	25	40°

Note:
1. θ1/2 is the angle from optical centerline where the luminous intensity is 1/2 the optical centerline value.

Electrical / Optical Characteristics at T_A=25°C

Symbol	Parameter	Device	Typ.	Max.	Units	Test Conditions
λpeak	Peak Wavelength	High Efficiency Red	627		nm	I_F=20mA
λD	Dominant Wavelength	High Efficiency Red	625		nm	I_F=20mA
Δλ1/2	Spectral Line Half-width	High Efficiency Red	45		nm	I_F=20mA
C	Capacitance	High Efficiency Red	15		pF	V_F=0V;f=1MHz
V_F	Forward Voltage	High Efficiency Red	2.0	2.5	V	I_F=20mA
I_R	Reverse Current	High Efficiency Red		10	uA	V_R = 5V

Absolute Maximum Ratings at T_A=25°C

Parameter	High Efficiency Red	Units
Power dissipation	105	mW
DC Forward Current	30	mA
Peak Forward Current [1]	160	mA
Reverse Voltage	5	V
Operating/Storage Temperature	-40°C To +85°C	
Lead Solder Temperature [2]	260°C For 3 Seconds	
Lead Solder Temperature [3]	260°C For 5 Seconds	

Notes:
1. 1/10 Duty Cycle, 0.1ms Pulse Width.
2. 2mm below package base.
3. 5mm below package base.

chanhvinh.com

Kingbright

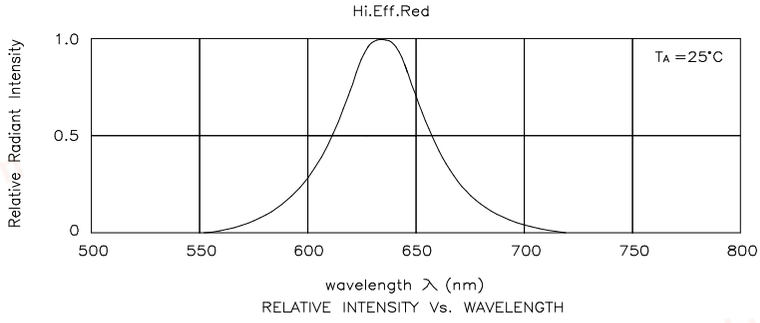

High Efficiency Red **L-710A8EW/1ID**

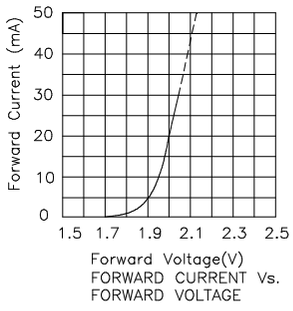

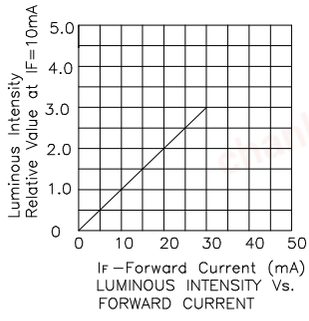

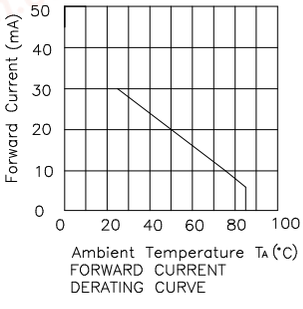

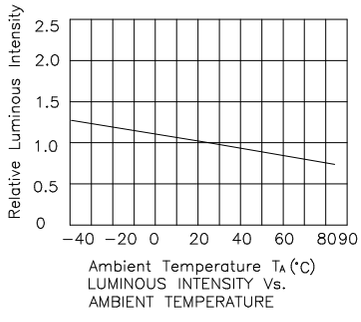

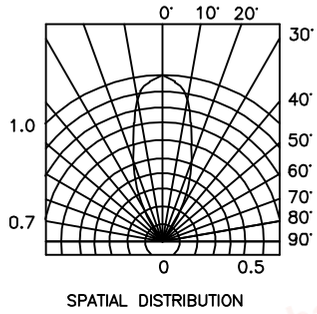

Remarks:

If special sorting is required (e.g. binning based on forward voltage, luminous intensity/ luminous flux or wavelength), the typical accuracy of the sorting process is as follows:

1. Wavelength: +/-1nm
2. Luminous Intensity/ Luminous Flux: +/-15%
3. Forward Voltage: +/-0.1V

Note: Accuracy may depend on the sorting parameters.