chanhvinh.com

Kingbright

3.2x1.6mm SMD CHIP LED LAMP

Part Number: KPTR-3216SYCK

Super Bright Yellow

Features

- 3.2mmx1.6mm SMT LED,1.05mm thickness.
- Low power consumption.
- Wide viewing angle.
- Ideal for backlight and indicator.
- Vavrious colors and lens types available.
- Package : 2000pcs / reel.
- Moisture sensitivity level : level 3.
- RoHS compliant.

Description

The Super Bright Yellow device is made with AlGaInP (on GaAs substrate) light emitting diode chip.

Package Dimensions

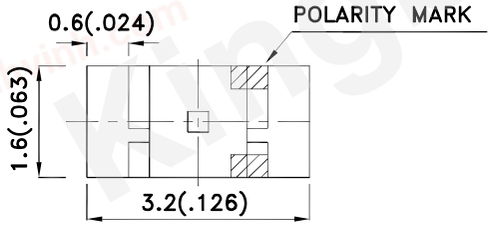

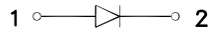

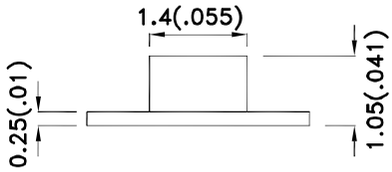

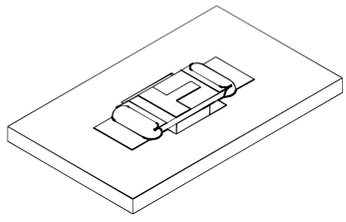

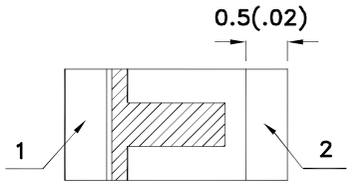

Notes:
1. All dimensions are in millimeters (inches).
2. Tolerance is ±0.2(0.008") unless otherwise noted.
3. The specifications, characteristics and technical data described in the datasheet are subject to change without prior notice.
4.The device has a single mounting surface. The device must be mounted according to the specifications.

chanhvinh.com

Kingbright

Selection Guide

Part No.	Dice	Lens Type	Iv (mcd) [2] @ 20mA		Viewing Angle [1]
			Min.	Typ.	2θ1/2
KPTR-3216SYCK	Super Bright Yellow (AlGaInP)	Water Clear	80	150	120°

Notes:
1. θ1/2 is the angle from optical centerline where the luminous intensity is 1/2 of the optical peak value.
2. Luminous intensity/ luminous Flux: +/-15%.
3. Luminous intensity value is traceable to the CIE127-2007 compliant national standards.

Electrical / Optical Characteristics at TA=25°C

Symbol	Parameter	Device	Typ.	Max.	Units	Test Conditions
λpeak	Peak Wavelength	Super Bright Yellow	590		nm	I_F=20mA
λD [1]	Dominant Wavelength	Super Bright Yellow	590		nm	I_F=20mA
Δλ1/2	Spectral Line Half-width	Super Bright Yellow	20		nm	I_F=20mA
C	Capacitance	Super Bright Yellow	20		pF	V_F=0V;f=1MHz
V_F [2]	Forward Voltage	Super Bright Yellow	2	2.5	V	I_F=20mA
I_R	Reverse Current	Super Bright Yellow		10	uA	V_R=5V

Notes:
1.Wavelength: +/-1nm.
2. Forward Voltage: +/-0.1V.
3. Wavelength value is traceable to the CIE127-2007 compliant national standards.

Absolute Maximum Ratings at TA=25°C

Parameter	Super Bright Yellow	Units
Power dissipation	75	mW
DC Forward Current	30	mA
Peak Forward Current [1]	175	mA
Reverse Voltage	5	V
Operating Temperature	-40°C To +85°C	
Storage Temperature	-40°C To +85°C	

Note:
1. 1/10 Duty Cycle, 0.1ms Pulse Width.

chanhvinh.com

Kingbright

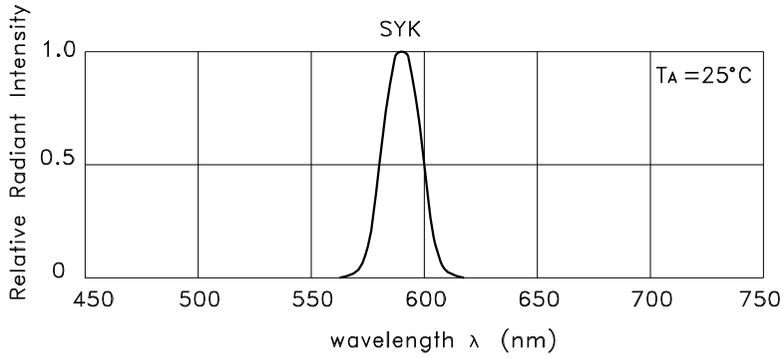

RELATIVE INTENSITY Vs. WAVELENGTH

Super Bright Yellow KPTR-3216SYCK

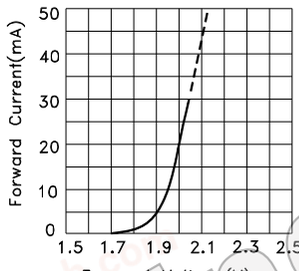

FORWARD CURRENT Vs. FORWARD VOLTAGE

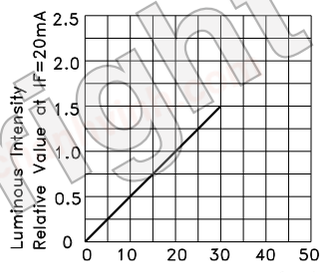

LUMINOUS INTENSITY Vs. FORWARD CURRENT

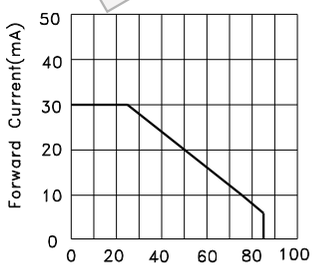

FORWARD CURRENT DERATING CURVE

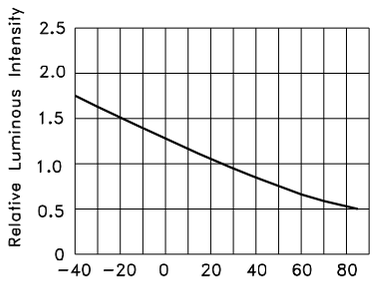

LUMINOUS INTENSITY Vs. AMBIENT TEMPERATURE

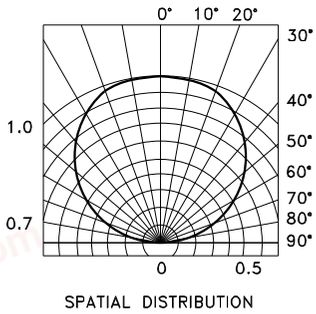

SPATIAL DISTRIBUTION

Kingbright

chanhvinh.com

Kingbright

KPTR-3216SYCK

Reflow soldering is recommended and the soldering profile is shown below.
Other soldering methods are not recommended as they might cause damage to the product.

Reflow Soldering Profile For Lead-free SMT Process.

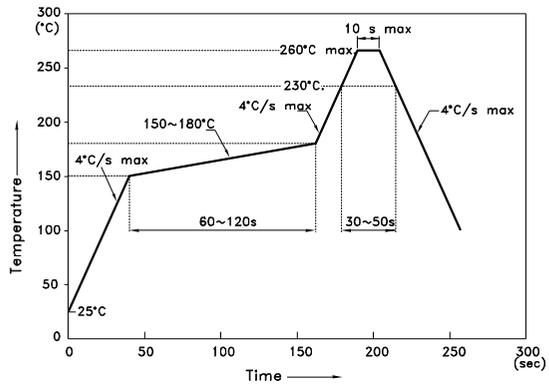

NOTES:
1. We recommend the reflow temperature 245°C(+/-5°C).The maximum soldering temperature should be limited to 260°C.
2. Don't cause stress to the epoxy resin while it is exposed to high temperature.
3. Number of reflow process shall be 2 times or less.

Recommended Soldering Pattern
(Units : mm; Tolerance: ± 0.1)

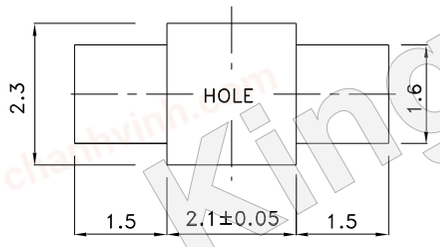

Reel Dimension

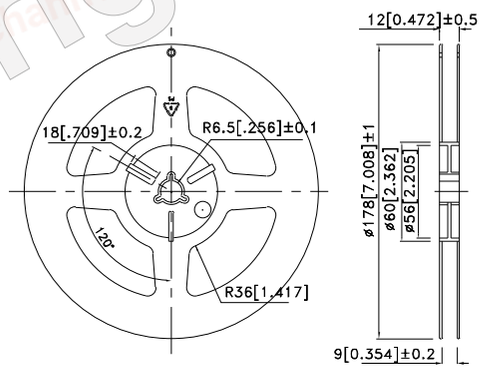

Tape Dimensions
(Units : mm)

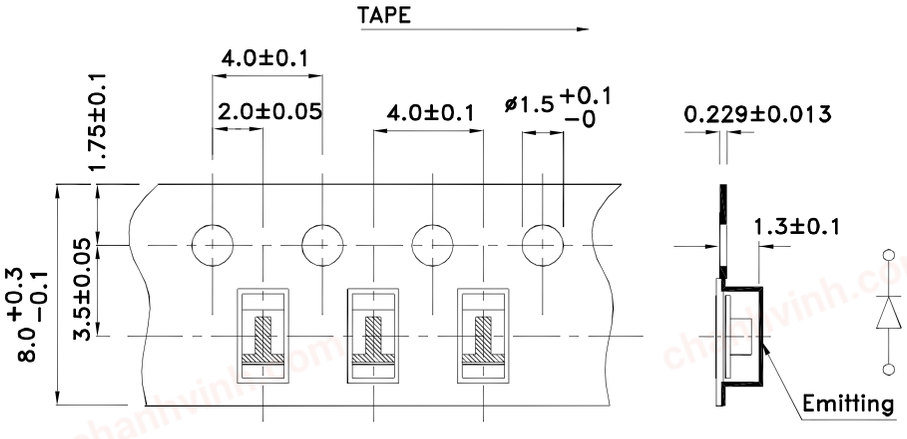

chanhvinh.com

Kingbright

PACKING & LABEL SPECIFICATIONS **KPTR-3216SYCK**

