chanhvinh.com

Kingbright

2.0x1.25mm SMD CHIP LED LAMP

Part Number: KPHCM-2012SECK

Super Bright Orange

Features

- 2.0X1.25mm SMT LED,0.5mm max. thickness.
- Low power consumption.
- Wide viewing angle.
- Ideal for backlight and indicator.
- Various colors and lens types available.
- Package : 2000pcs / reel.
- Moisture sensitivity level : level 3.
- RoHS compliant.

Description

The Super Bright Orange device is made with AlGaInP (on GaAs substrate) light emitting diode chip.

Package Dimensions

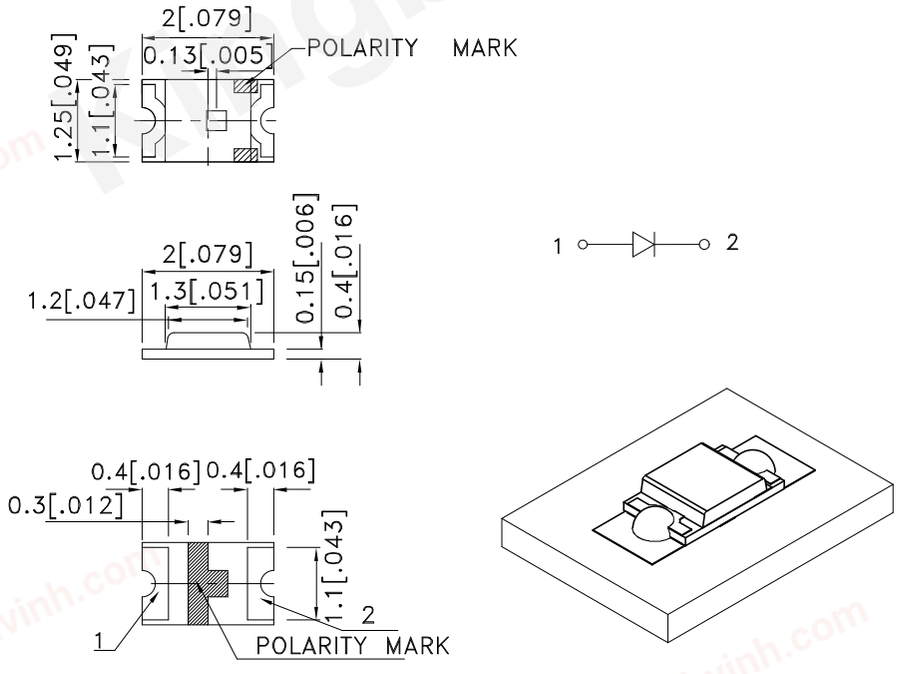

Notes:
1. All dimensions are in millimeters (inches).
2. Tolerance is ±0.1(0.004") unless otherwise noted.
3. The specifications, characteristics and technical data described in the datasheet are subject to change without prior notice.
4. The device has a single mounting surface. The device must be mounted according to the specifications.

chanhvinh.com

Kingbright

Selection Guide

Part No.	Dice	Lens Type	Iv (mcd) [2] @ 20mA		Viewing Angle [1]
			Min.	Typ.	2θ1/2
KPHCM-2012SECK	Super Bright Orange (AlGaInP)	Water Clear	120	250	110°
			*80	*180	

Notes:
1. θ1/2 is the angle from optical centerline where the luminous intensity is 1/2 of the optical peak value.
2. Luminous intensity/ luminous Flux: +/-15%.
*Luminous intensity value is traceable to the CIE127-2007 compliant national standards.

Electrical / Optical Characteristics at TA=25°C

Symbol	Parameter	Device	Typ.	Max.	Units	Test Conditions
λpeak	Peak Wavelength	Super Bright Orange	610		nm	I_F=20mA
λD [1]	Dominant Wavelength	Super Bright Orange	601		nm	I_F=20mA
Δλ1/2	Spectral Line Half-width	Super Bright Orange	29		nm	I_F=20mA
C	Capacitance	Super Bright Orange	15		pF	V_F=0V;f=1MHz
V_F [2]	Forward Voltage	Super Bright Orange	2.1	2.5	V	I_F=20mA
I_R	Reverse Current	Super Bright Orange		10	uA	V_R=5V

Notes:
1.Wavelength: +/-1nm.
2. Forward Voltage: +/-0.1V.
3. Wavelength value is traceable to the CIE127-2007 compliant national standards.

Absolute Maximum Ratings at TA=25°C

Parameter	Super Bright Orange	Units
Power dissipation	75	mW
DC Forward Current	30	mA
Peak Forward Current [1]	195	mA
Reverse Voltage	5	V
Operating Temperature	-40°C To +85°C	
Storage Temperature	-40°C To +85°C	

Note:
1. 1/10 Duty Cycle, 0.1ms Pulse Width.

chanhvinh.com

Kingbright

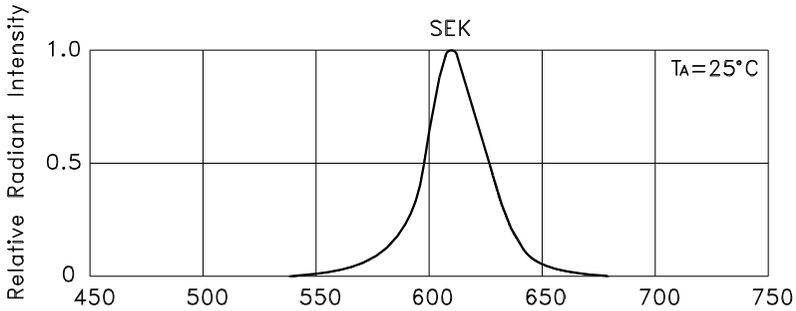

RELATIVE INTENSITY Vs. WAVELENGTH

Super Bright Orange **KPHCM-2012SECK**

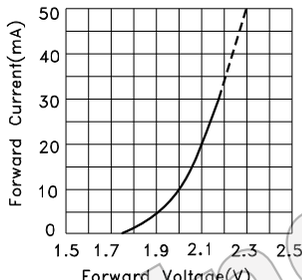

FORWARD CURRENT Vs.
FORWARD VOLTAGE

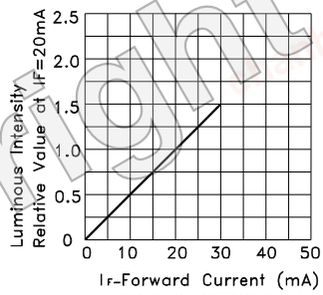

LUMINOUS INTENSITY Vs.
FORWARD CURRENT

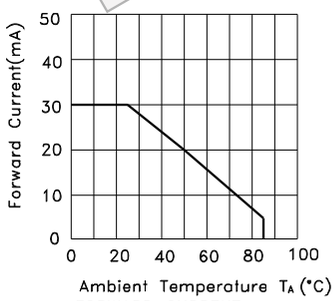

FORWARD CURRENT
DERATING CURVE

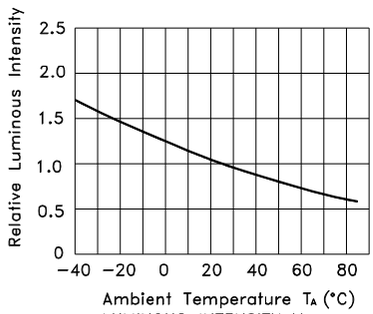

LUMINOUS INTENSITY Vs.
AMBIENT TEMPERATURE

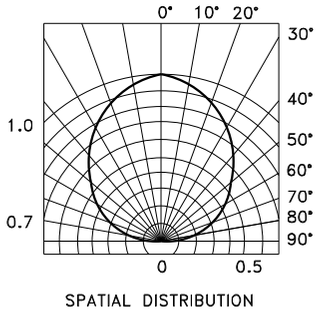

SPATIAL DISTRIBUTION

chanhvinh.com

Kingbright

KPHCM-2012SECK

Reflow soldering is recommended and the soldering profile is shown below.
Other soldering methods are not recommended as they might cause damage to the product.

Reflow Soldering Profile For Lead-free SMT Process.

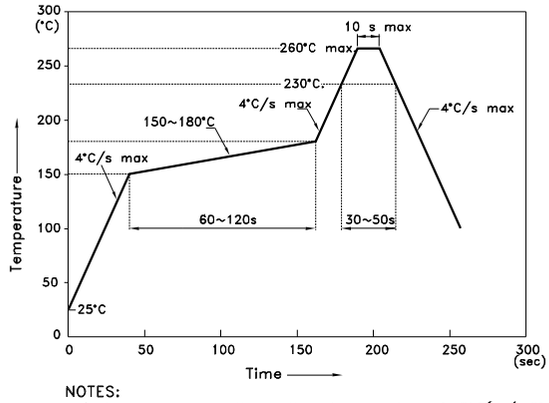

NOTES:
1. We recommend the reflow temperature 245°C(+/-5°C).The maximum soldering temperature should be limited to 260°C.
2. Don't cause stress to the epoxy resin while it is exposed to high temperature.
3. Number of reflow process shall be 2 times or less.

Recommended Soldering Pattern
(Units : mm; Tolerance: ± 0.1)

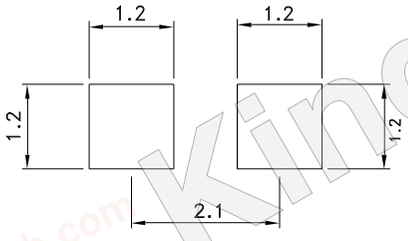

Reel Dimension

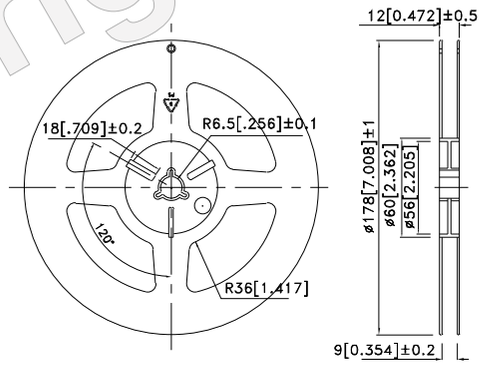

Tape Dimensions
(Units : mm)

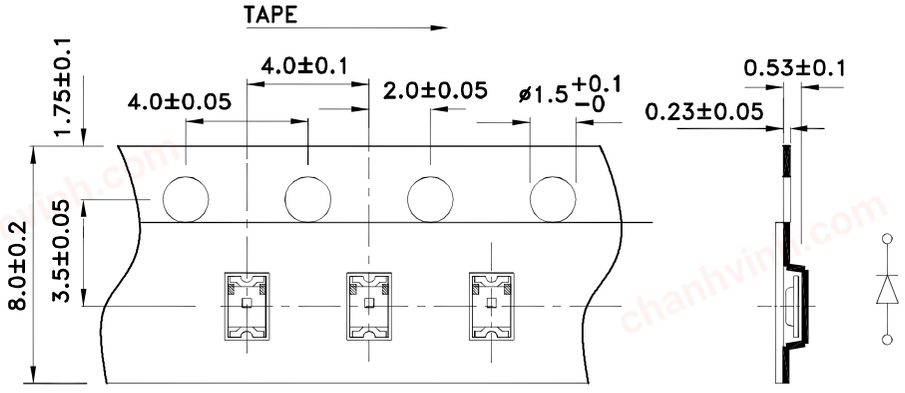

chanhvinh.com

Kingbright

PACKING & LABEL SPECIFICATIONS **KPHCM-2012SECK**

