chanhvinh.com

Kingbright

3.2x1.6mm SMD CHIP LED LAMP

Part Number: KP-3216EC High Efficiency Red

Features

- 3.2mmx1.6mm SMT LED, 1.1mm thickness.
- Low power consumption.
- Wide viewing angle.
- Ideal for backlight and indicator.
- Various colors and lens types available.
- Package : 2000pcs / reel.
- Moisture sensitivity level : level 3.
- RoHS compliant.

Description

The High Efficiency Red source color devices are made with Gallium Arsenide Phosphide on Gallium Phosphide Orange Light Emitting Diode.

Package Dimensions

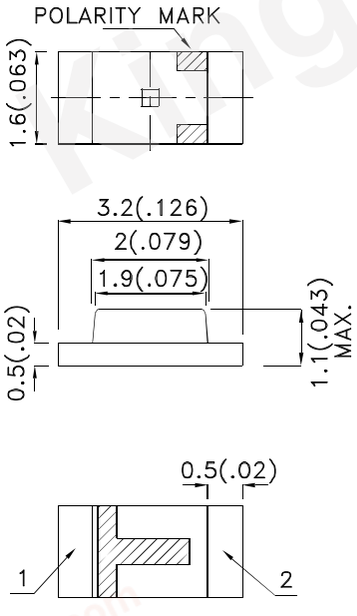

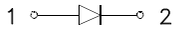

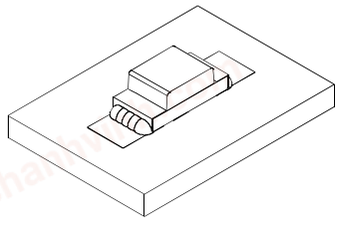

Notes:
1. All dimensions are in millimeters (inches).
2. Tolerance is ±0.2(0.0079") unless otherwise noted.
3. The specifications, characteristics and technical data described in the datasheet are subject to change without prior notice.
4.The device has a single mounting surface. The device must be mounted according to the specifications.

chanhvinh.com

Kingbright

Selection Guide

Part No.	Dice	Lens Type	Iv (mcd) [2] @ 20mA		Viewing Angle [1]
			Min.	Typ.	2θ1/2
KP-3216EC	High Efficiency Red (GaAsP/GaP)	Water Clear	8	15	120°
			*3	*8	

Notes:
1. θ1/2 is the angle from optical centerline where the luminous intensity is 1/2 of the optical peak value.
2. Luminous intensity/ luminous Flux: +/-15%.
 * Luminous intensity value is traceable to the CIE127-2007 compliant national standards.

Electrical / Optical Characteristics at TA=25°C

Symbol	Parameter	Device	Typ.	Max.	Units	Test Conditions
λpeak	Peak Wavelength	High Efficiency Red	627		nm	I_F=20mA
λD [1]	Dominant Wavelength	High Efficiency Red	617		nm	I_F=20mA
Δλ1/2	Spectral Line Half-width	High Efficiency Red	45		nm	I_F=20mA
C	Capacitance	High Efficiency Red	15		pF	V_F=0V;f=1MHz
V_F [2]	Forward Voltage	High Efficiency Red	2	2.5	V	I_F=20mA
I_R	Reverse Current	High Efficiency Red		10	uA	V_R=5V

Notes:
1.Wavelength: +/-1nm.
2. Forward Voltage: +/-0.1V.
3. Wavelength value is traceable to the CIE127-2007 compliant national standards.

Absolute Maximum Ratings at TA=25°C

Parameter	High Efficiency Red	Units
Power dissipation	75	mW
DC Forward Current	30	mA
Peak Forward Current [1]	160	mA
Reverse Voltage	5	V
Operating Temperature	-40°C To +85°C	
Storage Temperature	-40°C To +85°C	

Note:
1. 1/10 Duty Cycle, 0.1ms Pulse Width.

chanhvinh.com

Kingbright

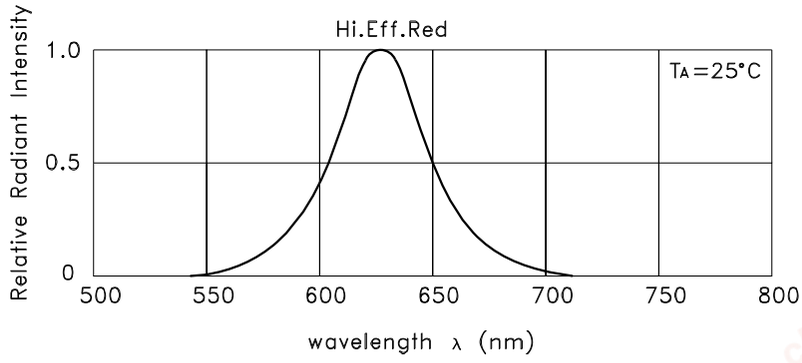

RELATIVE INTENSITY Vs. WAVELENGTH

High Efficiency Red **KP-3216EC**

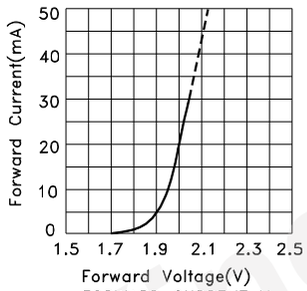

FORWARD CURRENT Vs.
FORWARD VOLTAGE

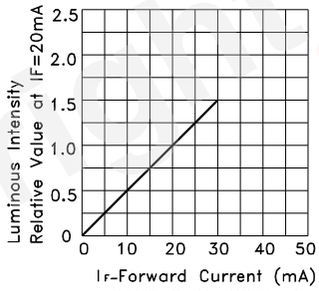

LUMINOUS INTENSITY Vs.
FORWARD CURRENT

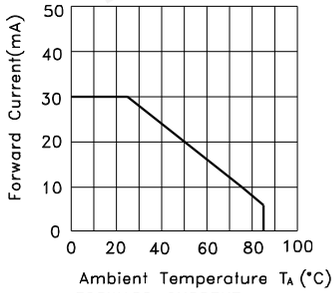

FORWARD CURRENT
DERATING CURVE

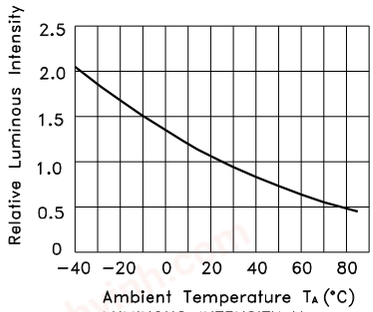

LUMINOUS INTENSITY Vs.
AMBIENT TEMPERATURE

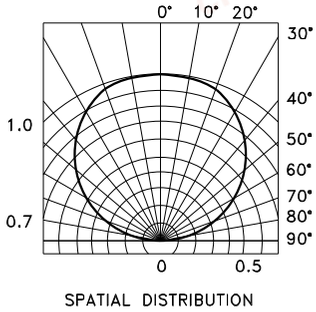

SPATIAL DISTRIBUTION

chanhvinh.com

Kingbright

KP-3216EC

Reflow soldering is recommended and the soldering profile is shown below.
Other soldering methods are not recommended as they might cause damage to the product.

Reflow Soldering Profile For Lead-free SMT Process.

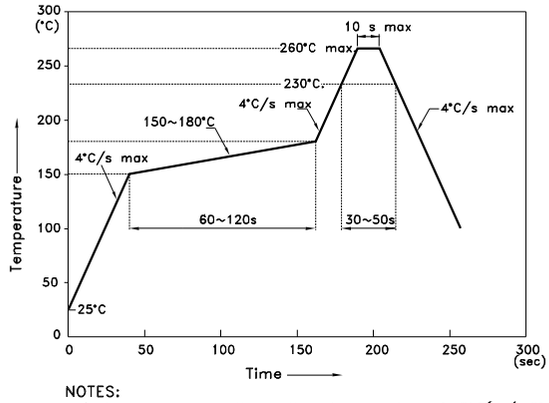

NOTES:
1. We recommend the reflow temperature 245°C(+/-5°C).The maximum soldering temperature should be limited to 260°C.
2. Don't cause stress to the epoxy resin while it is exposed to high temperature.
3. Number of reflow process shall be 2 times or less.

Recommended Soldering Pattern
(Units : mm; Tolerance: ± 0.1)

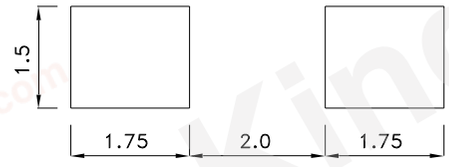

Reel Dimension

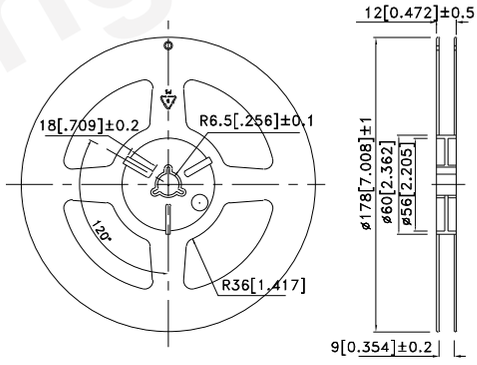

Tape Dimensions
(Units : mm)

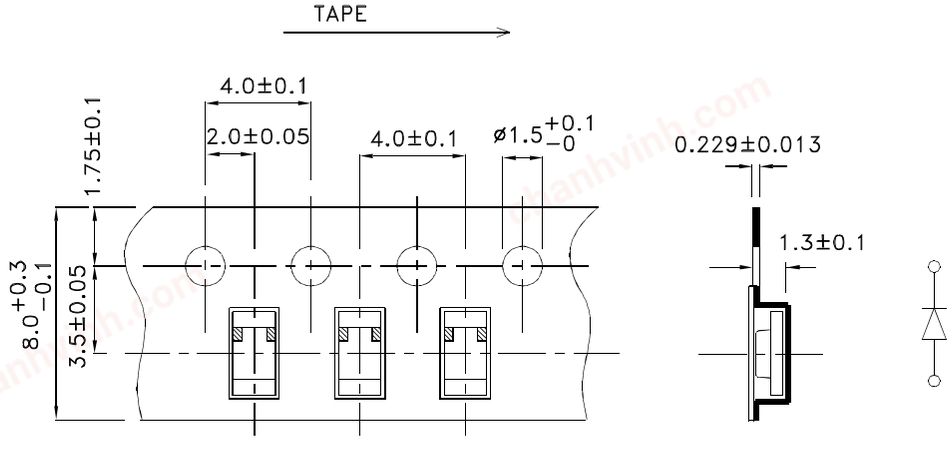

chanhvinh.com

Kingbright

PACKING & LABEL SPECIFICATIONS **KP-3216EC**

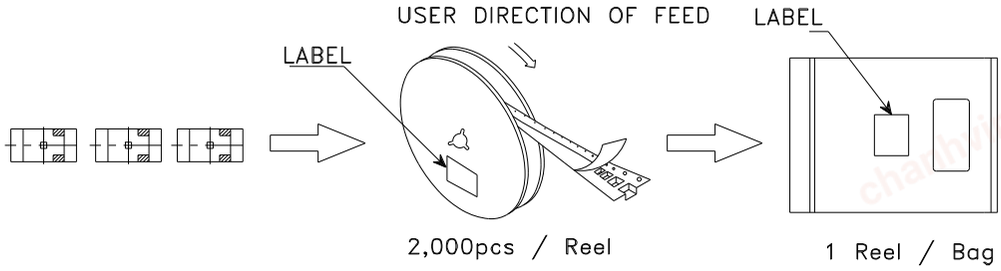

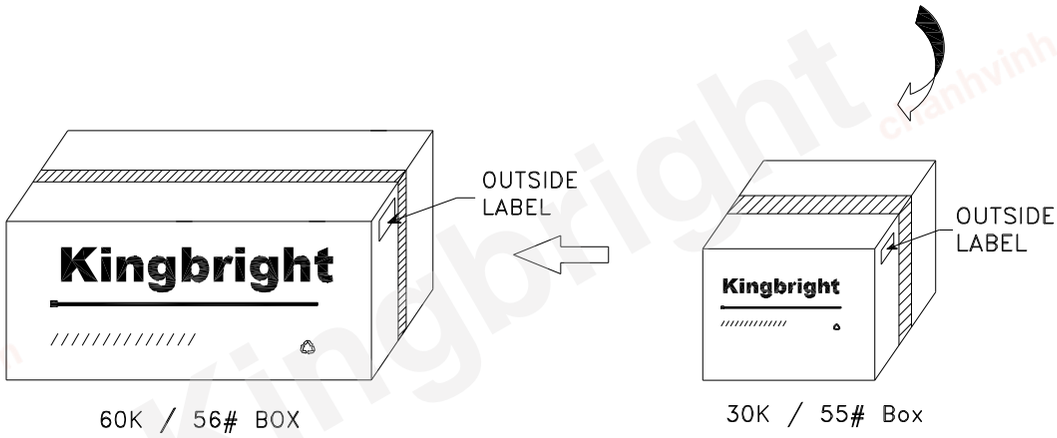

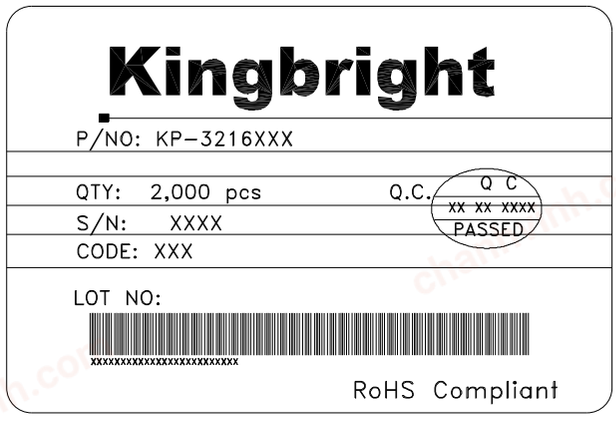

Detailed application notes are listed on our website.
http://www.kingbright.com/application_notes