chanhvinh.com

# T598D476M025ATS060

T598, Tantalum, Polymer Tantalum, 47 uF, 20%, 25 VDC, SMD, Polymer, Molded, Low ESR, AEC-Q200, 60 mOhms, 3.1 mm, 2817 / 7343

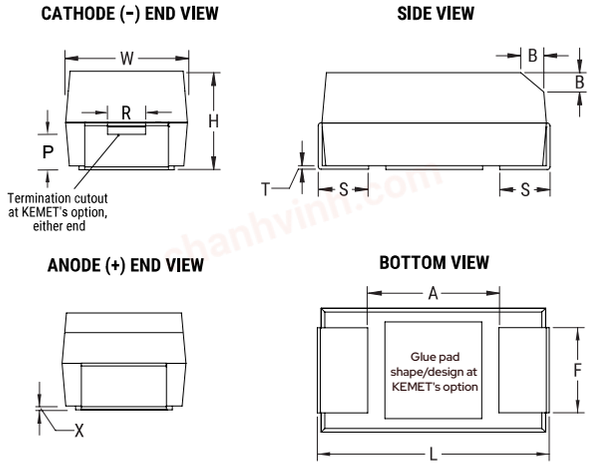


Click here for the 3D model.

| General Information | |
|---|---|
| Series | T598 |
| Dielectric | Polymer Tantalum |
| Style | SMD Chip |
| Description | SMD, Polymer, Molded, Low ESR, AEC-Q200 |
| Features | Automotive (Surge testing at 25C +/-5C / 10 cycles) |
| RoHS | Yes |
| Termination | Tin |
| Qualifications | AEC-Q200 |
| Typical Component Weight | 434.8 mg |
| Shelf Life | 52 Weeks |
| MSL | 3 |

| Dimensions | |
|---|---|
| L | 7.3mm +/-0.3mm |
| W | 4.3mm +/-0.3mm |
| H | 2.8mm +/-0.3mm |
| T | 0.13mm REF |
| S | 1.3mm +/-0.3mm |
| F | 2.4mm +/-0.1mm |
| A | 3.8mm MIN |
| B | 0.5mm +/-0.15mm |
| P | 0.9mm REF |
| R | 1mm REF |
| X | 0.1mm +/-0.1mm REF |

| Packaging Specifications | |
|---|---|
| Packaging | T&R, 178mm |
| Packaging Quantity | 500 |

| Specifications | |
|---|---|
| Capacitance | 47 uF |
| Tolerance | 20% |
| Voltage DC | 25 VDC (105C), 16.75 VDC (125C) |
| Temperature Range | -55/+125°C |
| Rated Temperature | 105°C |
| Humidity | 85C, 85% RH, load, 1000 Hours |
| Dissipation Factor | 10% 120Hz 25C |
| Failure Rate | N/A |
| ESR | 60 mOhms (100kHz 25C) |
| Ripple Current | 2740 mA (rms, 100kHz 45C), 1918 mA (rms, 105C), 685 mA (rms, 125C) |
| Leakage Current | 117.5 uA (5min 25°C) |

Statements of suitability for certain applications are based on our knowledge of typical operating conditions for such applications, but are not intended to constitute - and we specifically disclaim - any warranty concerning suitability for a specific customer application or use. This Information is intended for use only by customers who have the requisite experience and capability to determine the correct products for their application. Any technical advice inferred from this Information or otherwise provided by us with reference to the use of our products is given gratis, and we assume no obligation or liability for the advice given or results obtained.



© 2006 - 2026 YAGEO