chanhvinh.com

KEMET Part Number: SSHB21H-03770

(UALSB203770000)

KEMET, SSHB21H, AC Line Filters, Dual Mode, 0.077 H

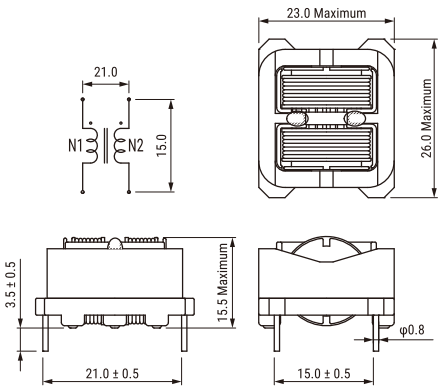

General Information	
Series:	SSHB21H
Style:	Through-Hole
RoHS:	Yes
Notes:	Marking: 03 Lot No.
Miscellaneous:	Temperature Rise Maximum: 40 K

Specifications	
Voltage AC:	250 VAC
Inductance:	77 mH (10 kHz)
Current:	300 mA
Temperature Range:	-25/+130°C
DC Resistance:	3.2 Ohms

Dimensions	
L	26mm MAX
T	23mm MAX
H	15.5mm MAX
LL	3.5mm +/-0.5mm
S	21mm +/-0.5mm

Packaging Specifications	
Packaging:	Tray
Packaging Quantity:	360
Weight:	14 g

Statements of suitability for certain applications are based on our knowledge of typical operating conditions for such applications, but are not intended to constitute - and we specifically disclaim - any warranty concerning suitability for a specific customer application or use. This Information is intended for use only by customers who have the requisite experience and capability to determine the correct products for their application. Any technical advice inferred from this Information or otherwise provided by us with reference to the use of our products is given gratis, and we assume no obligation or liability for the advice given or results obtained.

© 2006 - 2019 KEMET