chanhvinh.com

SN5-700

Aliases (UALSN570000000)

Differential Mode Chokes - Power, KEMET, SN, Through-Hole, Normal Mode, 140 uH

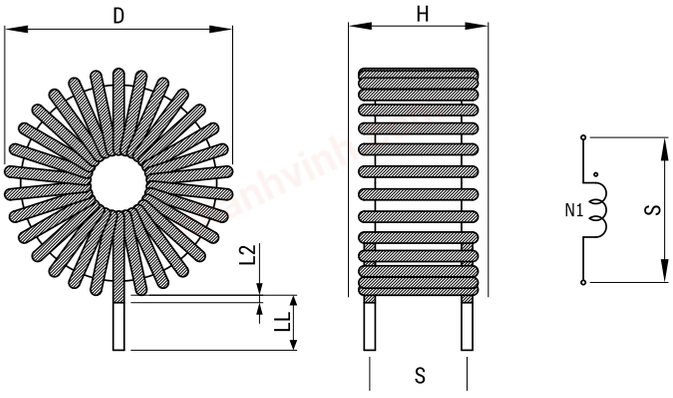

Click here for the 3D model.

General Information	
Series	SN
Style	Through-Hole
Features	Compact Size
RoHS	Yes
Miscellaneous	Temperature Rise Maximum: 25 K.
Core	Fe

Dimensions	
D	13mm MAX
H	8mm MAX
LL	20mm +/-2mm
S	6mm
L2	1.5mm MAX
Wire Size	0.35mm

Specifications	
Inductance	140 uH
Rated Current	900 mA
Temperature Range	-40/+105°C
DC Resistance	0.25 mOhms

Packaging Specifications	
Packaging	Bulk
Typical Component Weight	2.6 g

Statements of suitability for certain applications are based on our knowledge of typical operating conditions for such applications, but are not intended to constitute - and we specifically disclaim - any warranty concerning suitability for a specific customer application or use. This Information is intended for use only by customers who have the requisite experience and capability to determine the correct products for their application. Any technical advice inferred from this Information or otherwise provided by us with reference to the use of our products is given gratis, and we assume no obligation or liability for the advice given or results obtained.

© 2006 - 2026 YAGEO