chanhvinh.com

SH-322

Aliases (UDLSH003220000)

Not for New Design

EOL: 11-30-2026 / Last time buy date: 05-29-2026

Common Mode Chokes - Signal, KEMET, SH, Through-Hole, Common Mode, 7,500 nH

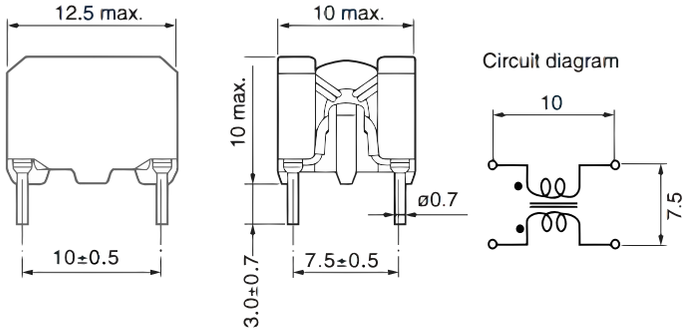

Click here for the 3D model.

General Information	
Series	SH
Style	Through-Hole
RoHS	Yes
Notes	Last time buy date: May 29th, 2026.
Miscellaneous	For 2 Lines.

Dimensions	
L	12.5mm MAX
W	10mm MAX
H	10mm MAX
LL	4mm +/-1mm
S	10mm +/-0.5mm
S1	7.5mm +/-0.5mm
F	0.7mm NOM

Specifications	
Voltage DC	50 VDC
Inductance	7.5 uH
Temperature Range	-25/+80°C
DC Resistance	20 mOhms (per Line MAX)

Packaging Specifications	
Packaging	Tray, Box
Packaging Quantity	1100
Typical Component Weight	1.58 g

Statements of suitability for certain applications are based on our knowledge of typical operating conditions for such applications, but are not intended to constitute - and we specifically disclaim - any warranty concerning suitability for a specific customer application or use. This Information is intended for use only by customers who have the requisite experience and capability to determine the correct products for their application. Any technical advice inferred from this Information or otherwise provided by us with reference to the use of our products is given gratis, and we assume no obligation or liability for the advice given or results obtained.

© 2006 - 2026 YAGEO