chanhvinh.com

Metallized Polypropylene Film EMI Suppression Capacitors

R58, Class X1, THB Grade IIIB, 600 VAC, 110°C (Automotive Grade)

Overview

The R58 is constructed of metallized polypropylene film encapsulated with self-extinguishing resin in a box of material meeting the requirements of UL 94 V–0.

Automotive Grade devices meet the demanding Automotive Electronics Council's AEC–Q200 qualification requirements.

Applications

For worldwide use in electromagnetic interference (EMI) suppression in across-the-line applications that require X1 safety classification. Typical applications include Industrial, Solar inverter output EMI filtering and Automotive HV DC bus filtering.

Benefits

- Approvals: ENEC, UL, cUL (in progress)
- Class X1 (IEC 60384-14)
- THB Grade IIIB: 85°C, 85% RH, 1,000 hours at 600 VAC acc. to IEC 60384-14
- THB Grade IIIB: 85°C, 85% RH, 1,000 hours at 1,200 VDC acc. to IEC 60384-14
- Low Halogen Content according to JS709C
- Rated AC voltage: 600 VAC 50/60 Hz
- Rated DC voltage: 1,200 VDC
- Capacitance range: 0.01 – 8.2 µF
- Lead spacing: 15.0 – 52.5 mm
- Capacitance tolerance: ±20%, ±10%
- Climatic category 40/110/56, IEC 60068-1
- Tape and reel in accordance with IEC 60286-2
- RoHS compliant and lead-free terminations
- Operating temperature range of –40°C to +110°C
- 100% screening factory test at 3,000 VDC
- Self-healing properties
- Automotive (AEC–Q200) grade





Preliminary

Customer Part Number

R58	6	I	2470	00	T0	M
Series	Rated Voltage (VAC)	Lead Spacing (mm)	Capacitance Code (pF)	Packaging	Internal Use	Capacitance Tolerance
X1, Metallized Polypropylene	6 = 600	I = 15.0 N = 22.5 R = 27.5 W = 37.5 Y = 52.5	The last three digits represent significant figures. The first digit specifies number of zeros to be added.	See Ordering Options Table	T0 T1	K = ±10% M = ±20%

© KEMET Electronics Corporation • KEMET Tower • One East Broward Boulevard
Fort Lauderdale, FL 33301 USA • 954-766-2800 • www.kemet.com

chanhvinh.com

Ordering Options Table

Lead Spacing Nominal (mm)	Type of Leads and Packaging	LL Lead Length (mm)	Lead and Packaging Code
15 22.5	**Standard Lead and Packaging Options**		
	Bulk (Bag) – Short Leads	4.0 +2/–0	00
	Pizza Pack – Short Leads	4.0 +2/–0	BB
	Ammo Pack	H_0 = 18.5 ±0.5	DQ[1]
	Other Lead and Packaging Options		
	Tape & Reel (Large Reel)	H_0 = 18.5 ±0.5	CK
	Tape & Reel (Standard Reel)	H_0 = 18.5 ±0.5	GY[1]
	Bulk (Bag)[2] – Short Leads	2.7 +0.5/–0	JA
	Bulk (Bag)[2] – Short Leads	3.5 +0.5/–0	JB
	Bulk (Bag)[2] – Short Leads	4.0 +0.5/–0	JE
	Bulk (Bag)[2] – Short Leads	3.2 +0.3/–0.2	JH
	Bulk (Bag) – Long Leads	18 ±1	JM
	Bulk (Bag) – Long Leads	30 +5/–0	40
	Bulk (Bag) – Long Leads	25 +2/–1	50
27.5	**Standard Lead and Packaging Options**		
	Bulk (Tray) – Short Leads	4.0 +2/–0	00
	Pizza Pack – Short Leads	4.0 +2/–0	BB
	Tape & Reel (Large Reel)	H_0 = 18.5 ±0.5	CK[1]
	Other Lead and Packaging Options		
	Bulk (Tray) – Short Leads	2.7 +0.5/–0	JA
	Bulk (Tray) – Short Leads	3.5 +0.5/–0	JB
	Bulk (Tray) – Short Leads	4.0 +0.5/–0	JE
	Bulk (Tray) – Short Leads	3.2 +0.3/–0.2	JH
	Bulk (Tray) – Long Leads	18 ±1	JM
	Bulk (Tray) – Long Leads	30 +5/–0	40
	Bulk (Tray) – Long Leads	25 +2/–1	50

1 Not for all sizes, see "Packaging Quantities" table.
*2 For lead spacing 22.5 case sizes ≥ 8.5*17*26.5 the parts are packed in Pizza box 335*320*34 mm.*

Preliminary

chanhvinh.com

Ordering Options Table cont.

Lead Spacing Nominal (mm)	Type of Leads and Packaging	LL Lead Length (mm)	Lead and Packaging Code
37.5	**Standard Lead and Packaging Options**		
	Pizza Pack – Short Leads	4.0 +2/−0	00
	Other Lead and Packaging Options		
	Pizza Pack – Short Leads	2.7 +0.5/−0	JA
	Pizza Pack – Short Leads	3.5 +0.5/−0	JB
	Pizza Pack – Short Leads	4.0 +0.5/−0	JE
	Pizza Pack – Short Leads	3.2 +0.3/−0.2	JH
	Pizza Pack – Long Leads	18 ±1	JM
	Pizza Pack – Long Leads	30 +5/−0	40
	Pizza Pack – Long Leads	25 +2/-1	50
52.5	**Standard Lead and Packaging Options**		
	Pizza Pack – Short Leads	4.0 +2/−0	00

1 Not for all sizes, see "Packaging Quantities" table.
*2 For lead spacing 22.5 case sizes ≥ 8.5*17*26.5 the parts are packed in Pizza box 335*320*34 mm.*

Preliminary

chanhvinh.com

Dimensions – Millimeters

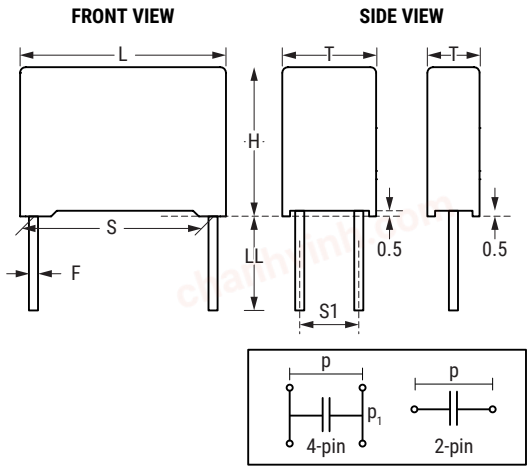

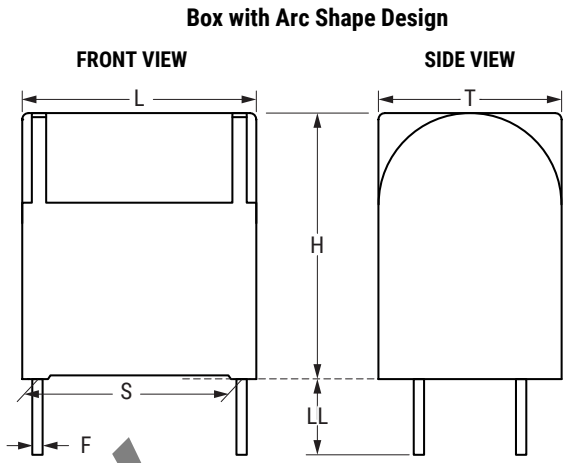

S		S1		T		H		L		F	
Nominal	Tolerance	Nominal	Tolerance	Nominal	Tolerance	Nominal	Tolerance	Nominal	Tolerance	Nominal	Tolerance
15.0	±0.4	-	-	5.0	+0.3/-0.5	11.0	+0.3/-0.5	18.0	+0.5/-0.5	0.6	±0.05
15.0	±0.4	-	-	6.0	+0.3/-0.5	12.0	+0.3/-0.5	18.0	+0.5/-0.5	0.6	±0.05
15.0	±0.4	-	-	7.5	+0.3/-0.5	13.5	+0.3/-0.5	18.0	+0.5/-0.5	0.6	±0.05
15.0	±0.4	-	-	8.5	+0.3/-0.5	14.5	+0.3/-0.5	18.0	+0.5/-0.5	0.6	±0.05
15.0	±0.4	-	-	10.0	+0.3/-0.5	16.0	+0.3/-0.5	18.0	+0.5/-0.5	0.8	±0.05
15.0	±0.4	-	-	11.0	+0.3/-0.5	19.0	+0.3/-0.5	18.0	+0.5/-0.5	0.8	±0.05
22.5	±0.4	-	-	6.0	+0.3/-0.5	15.0	+0.3/-0.5	26.5	+0.5/-0.5	0.8	±0.05
22.5	±0.4	-	-	7.0	+0.3/-0.5	16.0	+0.3/-0.5	26.5	+0.5/-0.5	0.8	±0.05
22.5	±0.4	-	-	8.5	+0.3/-0.5	17.0	+0.3/-0.5	26.5	+0.5/-0.5	0.8	±0.05
22.5	±0.4	-	-	10.0	+0.3/-0.5	18.5	+0.3/-0.5	26.5	+0.5/-0.5	0.8	±0.05
22.5	±0.4	-	-	11.0	+0.3/-0.5	20.0	+0.3/-0.5	26.5	+0.5/-0.5	0.8	±0.05
22.5	±0.4	-	-	13.0	+0.3/-0.5	22.0	+0.3/-0.5	26.5	+0.5/-0.5	0.8	±0.05
27.5	±0.4	-	-	11.0	+0.3/-0.7	20.0	+0.3/-0.7	32.0	+0.5/-0.7	0.8	±0.05
27.5	±0.4	-	-	13.0	+0.3/-0.7	22.0	+0.3/-0.7	32.0	+0.5/-0.7	0.8	±0.05
27.5	±0.4	-	-	14.0	+0.3/-0.7	28.0	+0.3/-0.7	32.0	+0.5/-0.7	0.8	±0.05
27.5	±0.4	-	-	18.0	+0.3/-0.7	33.0	+0.3/-0.7	32.0	+0.5/-0.7	0.8	±0.05
27.5	±0.4	-	-	22.0	+0.3/-0.7	37.0	+0.3/-0.7	32.0	+0.5/-0.7	0.8	±0.05
37.5	±0.4	-	-	11.0	+0.3/-0.7	22.0	+0.3/-0.7	42.0	+0.5/-0.7	1.0	±0.05
37.5	±0.4	-	-	13.0	+0.3/-0.7	24.0	+0.3/-0.7	42.0	+0.5/-0.7	1.0	±0.05
37.5	±0.4	-	-	16.0	+0.3/-0.7	28.5	+0.3/-0.7	42.0	+0.5/-0.7	1.0	±0.05
37.5	±0.4	-	-	19.0	+0.3/-0.7	32.0	+0.3/-0.7	42.0	+0.5/-0.7	1.0	±0.05
37.5	±0.4	-	-	20.0	+0.3/-0.7	40.0	+0.3/-0.7	42.0	+0.5/-0.7	1.0	±0.05
37.5	±0.4	-	-	24.0	+0.3/-0.7	44.0	+0.3/-0.7	42.0	+0.5/-0.7	1.0	±0.05
37.5	±0.4	-	-	30.0	+0.3/-0.7	45.0	+0.3/-0.7	42.0	+0.5/-0.7	1.0	±0.05
52.5	±0.4	20.3	±0.4	30.0	+1.2/-1.2	45.0	+1.2/-1.2	57.5	+1.2/-1.2	1.2	±0.05
52.5	±0.4	20.3	±0.4	35.0	+1.2/-1.2	50.0	+1.2/-1.2	57.5	+1.2/-1.2	1.2	±0.05
52.5*	±0.4	20.3	±0.4	45.0	+1.2/-1.2	56.0	+1.2/-1.2	57.5	+1.2/-1.2	1.2	±0.05
Note: See the Ordering Options Table for lead length (LL) options.											

** Box with Arc Shape Design*

Preliminary

chanhvinh.com

Performance Characteristics

Dielectric	Polypropylene film			
Plates	Metal layer deposited by evaporation under vacuum			
Winding	Non-inductive type			
Leads	Tinned wire			
Protection	Plastic case, thermosetting resin-filled. Box material is solvent resistant and flame retardant according to UL94.			
Related Documents	IEC 60384-14, EN 60384-14			
Rated Voltage V_R	600 VAC (50/60 Hz) / 1,200 VDC			
Capacitance Range	0.01 – 8.2 µF			
Capacitance Values	E6 series (IEC 60063) measured at 1 kHz and +20 ±1°C			
Capacitance Tolerance	±10%, ±20%			
Temperature Range	−40°C to 110°C			
Climatic Category	40/110/56 IEC 60068-1			
Storage Conditions	Storage time: ≤ 24 months from the date marked on the label package			
	Average relative humidity per year ≤ 70%			
	RH ≤ 85% for 30 days randomly distributed throughout the year			
	Dew is absent			
	Temperature: −40 to 80°C (see "Maximum Humidity in Storage Conditions" graph below)			
Approvals	ENEC, UL, cUL (in progress)			
Dissipation Factor (tanδ) at 1 kHz	Maximum Values at +25°C ±5°C			
	Pitch = 15 mm	Pitch = 22.5 or 27.5 mm	Pitch = 37.5 or 52.5 mm	
	0.4%	0.3%	0.2%	
Test Voltage Between Terminals	The 100% screening factory test is carried out at 3,000 VDC. The voltage level is selected to meet the requirements in applicable equipment standards. All electrical characteristics are checked after the test. It is not permitted to repeat this test as there is a risk to damage the capacitor. KEMET is not liable in such case for any failures.			
Insulation Resistance	Measured at +25°C ±5°C, according to IEC 60384-2			
	Minimum Values Between Terminals			
	Voltage Charge	Voltage Charge Time	C ≤ 0.33 µF	C > 0.33 µF
	100 VDC	1 minute	≥ 1 • 10^5 MΩ (≥ 5 • 10^5 MΩ)*	≥ 30,000 MΩ • µF (≥ 150,000 MΩ • µF)*

**Typical Value*

Preliminary

chanhvinh.com

Performance Characteristics cont.

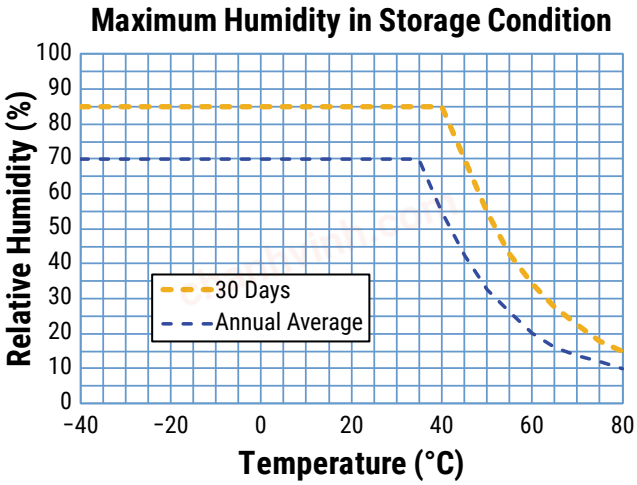

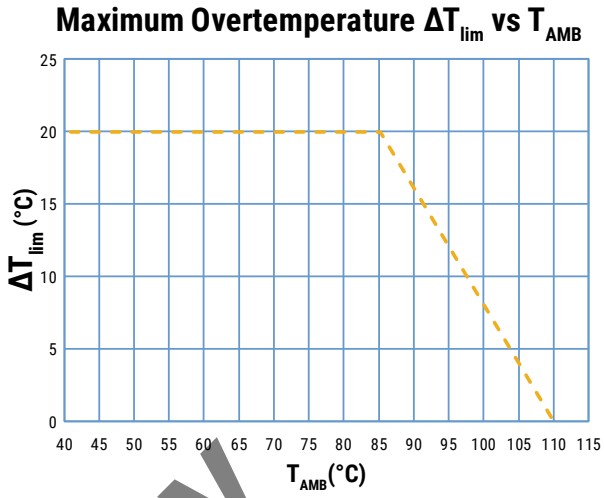

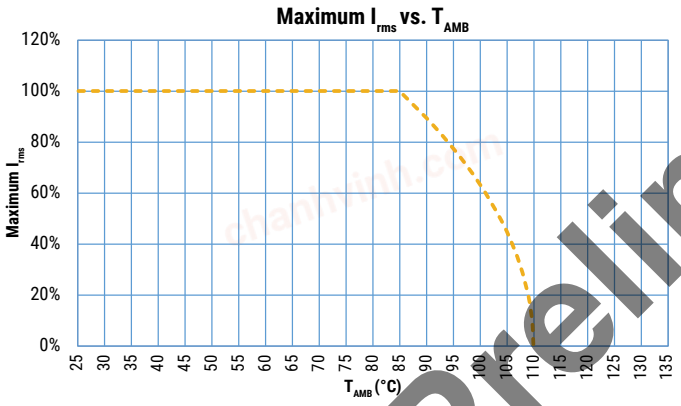

Preliminary

T_{AMB} is the maximum ambient temperature surrounding the capacitor or hottest contact point (e.g. tracks), whichever is higher, in the worst operation conditions in °C.

Qualification

Automotive grade products meet or exceed the requirements outlined by the Automotive Electronics Council. Details regarding test methods and conditions are referenced in document AEC–Q200, Stress Test Qualification for Passive Components. For additional information regarding the Automotive Electronics Council and AEC–Q200, please visit their website at www.aecouncil.com.

chanhvinh.com

Impedance Graph

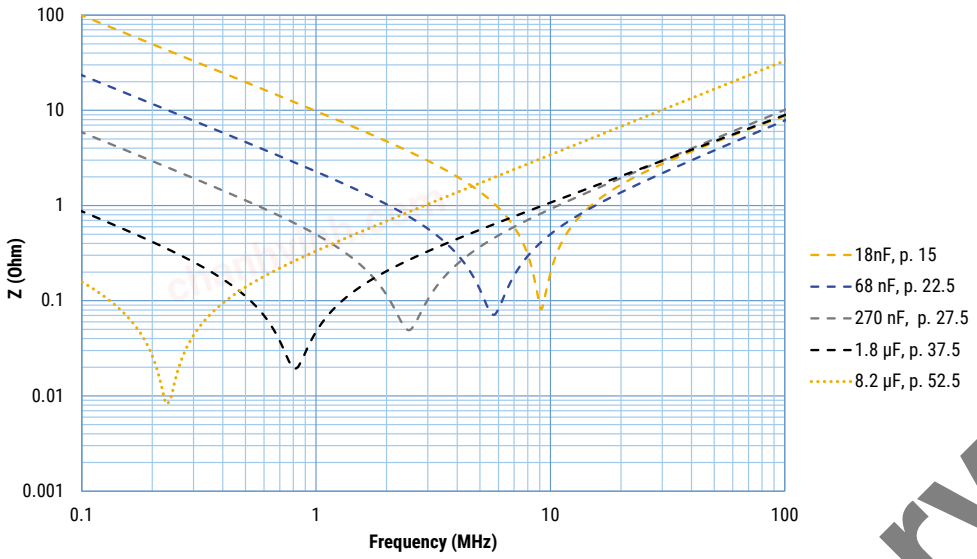

Environmental Test Data

Test	IEC Publication	Procedure
Endurance	IEC 60384-14	1.25 x V_R VAC 50 Hz, once every hour increase to 1,000 VAC for 0.1 second, 1,000 hours at upper rated temperature
Endurance	IEC 60384-14	1.25 x 1200 VDC, 1,000 hours at upper rated temperature
Vibration	MIL–STD–202 Method 204	5 G for 20 minutes, 12 cycles each of 3 orientations. Use 8" X 5" PCB, 0.031" thick. 7 secure points on one 8" side and 2 secure points at corners of opposite sides. Parts mounted within 2" from any secure point. Test from 10 – 2,000 Hz.
Mechanical Shock	MIL–STD–202 Method 213	Figure 1 of Method 213. Condition C
Temperature Cycling	JESD22–Method JA–104	1,000 cycles (–40°C to 110°C) Note: Measurement at 24 ±4 hours after test conclusion. 30 minute maximum dwell time at each temperature extreme. 1 minute maximum transition time.
Active Flammability	IEC 60384-14	V_R + 20 surge pulses at 4 kV (pulse every 5 seconds)
Passive Flammability	IEC 60384-14	IEC 60384-1, IEC 60695-11-5 Needle Flame Test
Biased Humidity	According to Grade IIIB	85°C/85% RH and 600 VAC, 1,000 hours Capacitance change (ΔC/C): ≤ 10% Dissipation factor change (Δtan δ): ≤ 24 * 10–3 (at 10 kHz) for C ≤ 1 µF Dissipation factor change (Δtan δ): ≤ 15 * 10–3 (at 1 kHz) for C > 1 µF Insulation resistance Rins or time constant τ = CR Rins: ≥ 50% of initial limit
Biased Humidity	According to Grade IIIB	85°C/85% RH and 1200 VDC, 1,000 hours Capacitance change (ΔC/C): ≤ 10% Dissipation factor change (Δtan δ): ≤ 24 * 10–3 (at 10 kHz) for C ≤ 1 µF Dissipation factor change (Δtan δ): ≤ 15 * 10–3 (at 1 kHz) for C > 1 µF Insulation resistance Rins or time constant τ = CR Rins: ≥ 50% of initial limit

Preliminary

chanhvinh.com

Maximum Voltage (V_{RMS}) Versus Frequency (Sinusoidal Waveform/Th ≤ 85°C)

Lead Spacing 15 mm

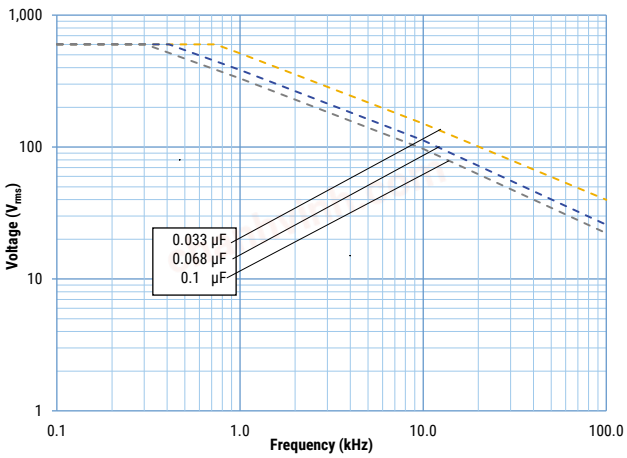

Lead Spacing 22.5 mm

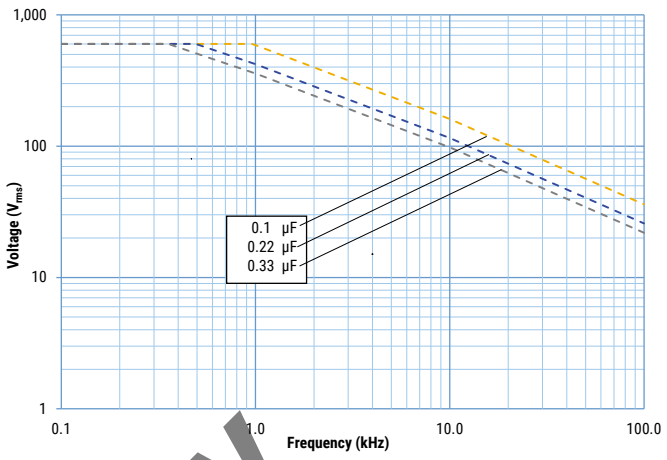

Lead Spacing 27.5 mm

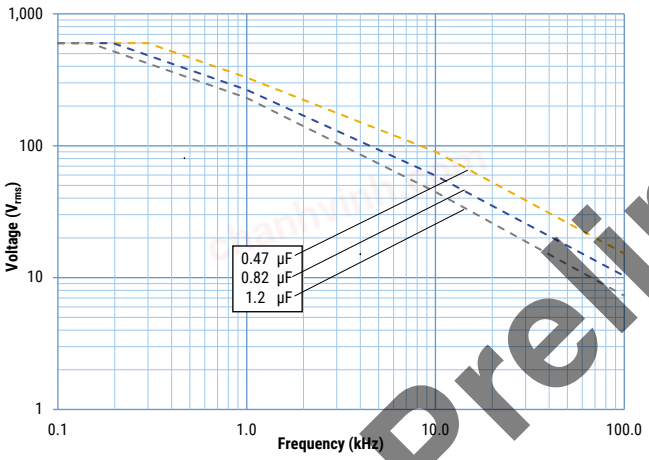

Lead Spacing 37.5 mm

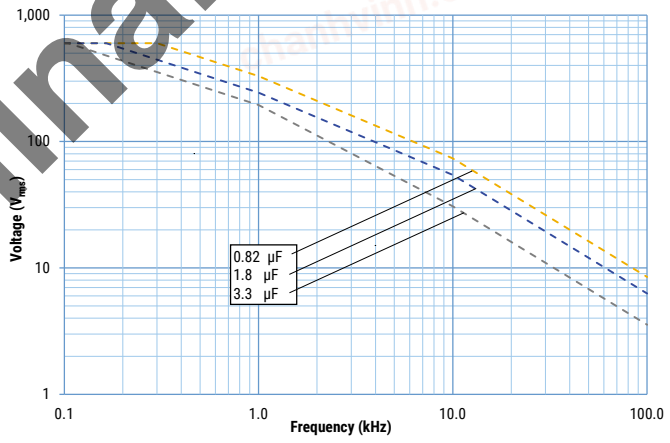

Lead Spacing 52.5 mm

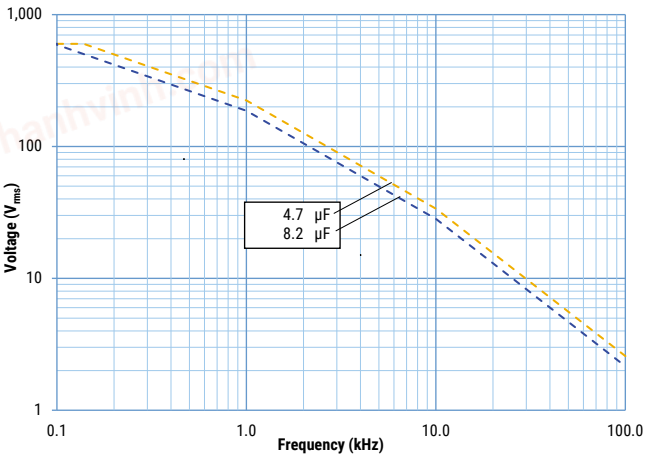

Preliminary

chanhvinh.com

Maximum Current (I_{RMS}) Versus Frequency (Sinusoidal Waveform/Th ≤ 85°C)

Lead Spacing 15 mm

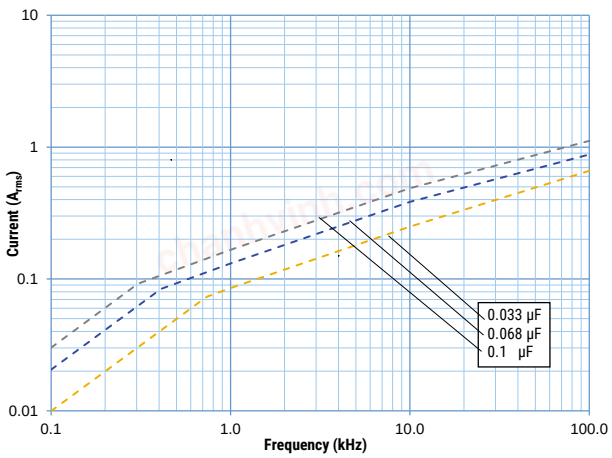

Lead Spacing 22.5 mm

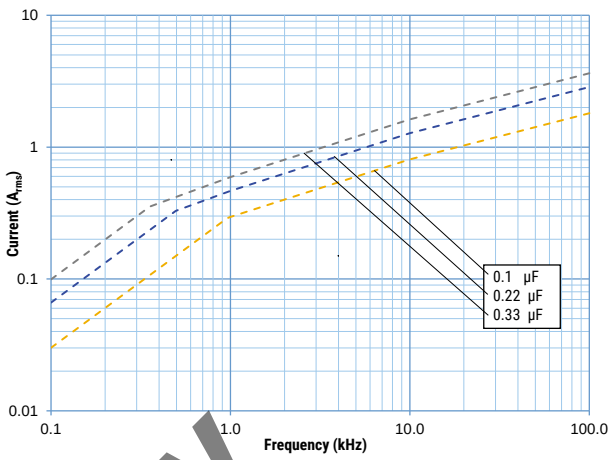

Lead Spacing 27.5 mm

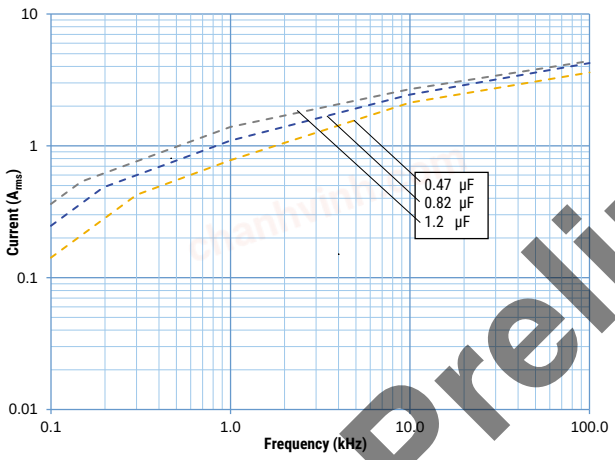

Lead Spacing 37.5 mm

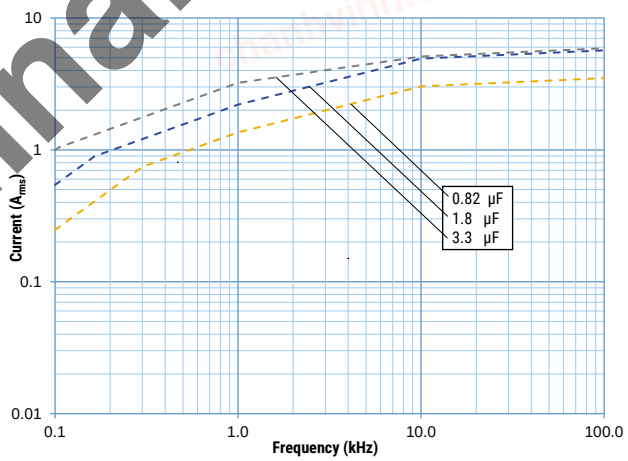

Lead Spacing 52.5 mm

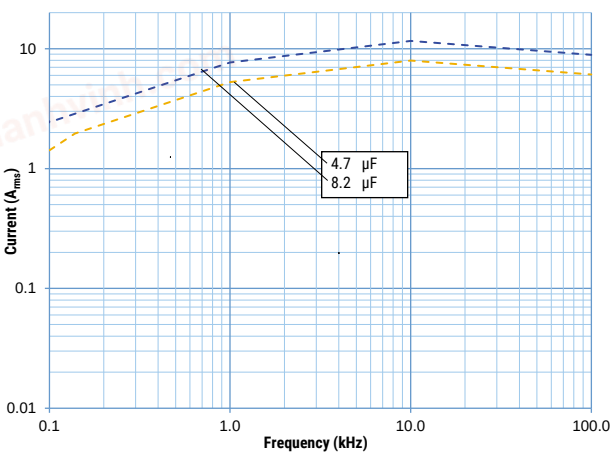

Preliminary

chanhvinh.com

Environmental Compliance

All KEMET EMI capacitors are RoHS compliant.

Approvals

Certification Body	Mark	Specification	File Number
IMQ S.p.A.		EN/IEC 60384–14	In Progress
UL		UL 60384–14 and CAN/CSA–E60384–14	In Progress
CQC		IEC 60384–14	In Progress

Preliminary

chanhvinh.com

Table 1 – Ratings & Part Number Reference

Capacitance Value (µF)	Dimensions in mm			Lead Spacing (S)	dV/dt (V/µs)	KEMET Part Number	Customer Part Number
	T	H	L				
0.01	5.0	11.0	18.0	15.0	600	586I2100(1)T0(2)	R586I2100(1)T0(2)
0.012	5.0	11.0	18.0	15.0	600	586I2120(1)T0(2)	R586I2120(1)T0(2)
0.015	5.0	11.0	18.0	15.0	600	586I2150(1)T0(2)	R586I2150(1)T0(2)
0.018	6.0	12.0	18.0	15.0	600	586I2180(1)T0(2)	R586I2180(1)T0(2)
0.022	6.0	12.0	18.0	15.0	600	586I2220(1)T0(2)	R586I2220(1)T0(2)
0.027	7.5	13.5	18.0	15.0	600	586I2270(1)T0(2)	R586I2270(1)T0(2)
0.033	7.5	13.5	18.0	15.0	600	586I2330(1)T0(2)	R586I2330(1)T0(2)
0.039	7.5	13.5	18.0	15.0	600	586I2390(1)T0(2)	R586I2390(1)T0(2)
0.047	8.5	14.5	18.0	15.0	600	586I2470(1)T0(2)	R586I2470(1)T0(2)
0.056	10.0	16.0	18.0	15.0	600	586I2560(1)T0(2)	R586I2560(1)T0(2)
0.068	10.0	16.0	18.0	15.0	600	586I2680(1)T0(2)	R586I2680(1)T0(2)
0.082	11.0	19.0	18.0	15.0	600	586I2820(1)T0(2)	R586I2820(1)T0(2)
0.10	11.0	19.0	18.0	15.0	600	586I3100(1)T0(2)	R586I3100(1)T0(2)
0.047	6.0	15.0	26.5	22.5	300	586N2470(1)T0(2)	R586N2470(1)T0(2)
0.056	6.0	15.0	26.5	22.5	300	586N2560(1)T0(2)	R586N2560(1)T0(2)
0.068	6.0	15.0	26.5	22.5	300	586N2680(1)T0M	R586N2680(1)T0M
0.082	7.0	16.0	26.5	22.5	300	586N2820(1)T0(2)	R586N2820(1)T0(2)
0.10	8.5	17.0	26.5	22.5	300	586N3100(1)T0(2)	R586N3100(1)T0(2)
0.12	8.5	17.0	26.5	22.5	300	586N3120(1)T0(2)	R586N3120(1)T0(2)
0.15	10.0	18.5	26.5	22.5	300	586N3150(1)T0(2)	R586N3150(1)T0(2)
0.18	10.0	18.5	26.5	22.5	300	586N3180(1)T0(2)	R586N3180(1)T0(2)
0.22	11.0	20.0	26.5	22.5	300	586N3220(1)T0(2)	R586N3220(1)T0(2)
0.27	13.0	22.0	26.5	22.5	300	586N3270(1)T0(2)	R586N3270(1)T0(2)
0.33	13.0	22.0	26.5	22.5	300	586N3330(1)T0M	R586N3330(1)T0M
0.22	11.0	20.0	32.0	27.5	225	586R3220(1)T0(2)	R586R3220(1)T0(2)
0.27	13.0	22.0	32.0	27.5	225	586R3270(1)T0(2)	R586R3270(1)T0(2)
0.33	13.0	22.0	32.0	27.5	225	586R3330(1)T0(2)	R586R3330(1)T0(2)
0.39	14.0	28.0	32.0	27.5	225	586R3390(1)T0(2)	R586R3390(1)T0(2)
0.47	14.0	28.0	32.0	27.5	225	586R3470(1)T0(2)	R586R3470(1)T0(2)
0.56	14.0	28.0	32.0	27.5	225	586R3560(1)T0M	R586R3560(1)T0M
0.68	18.0	33.0	32.0	27.5	225	586R3680(1)T0(2)	R586R3680(1)T0(2)
0.82	18.0	33.0	32.0	27.5	225	586R3820(1)T0(2)	R586R3820(1)T0(2)
1.0	18.0	33.0	32.0	27.5	225	586R4100(1)T0M	R586R4100(1)T0M
1.2	22.0	37.0	32.0	27.5	225	586R4120(1)T0(2)	R586R4120(1)T0(2)
0.47	11.0	22.0	42.0	37.5	150	586W3470(1)T0M	R586W3470(1)T0M
0.56	13.0	24.0	42.0	37.5	150	586W3560(1)T0(2)	R586W3560(1)T0(2)
0.68	13.0	24.0	42.0	37.5	150	586W3680(1)T0M	R586W3680(1)T0M
0.82	16.0	28.5	42.0	37.5	150	586W3820(1)T0(2)	R586W3820(1)T0(2)
1.0	16.0	28.5	42.0	37.5	150	586W4100(1)T0M	R586W4100(1)T0M
1.2	19.0	32.0	42.0	37.5	150	586W4120(1)T0(2)	R586W4120(1)T0(2)
1.5	20.0	40.0	42.0	37.5	150	586W4150(1)T0(2)	R586W4150(1)T0(2)
1.8	20.0	40.0	42.0	37.5	150	586W4180(1)T0(2)	R586W4180(1)T0(2)
2.2	24.0	44.0	42.0	37.5	150	586W4220(1)T0(2)	R586W4220(1)T0(2)
2.7	24.0	44.0	42.0	37.5	150	586W4270(1)T0(2)	R586W4270(1)T0(2)
3.3	30.0	45.0	42.0	37.5	150	586W4330(1)T0(2)	R586W4330(1)T0(2)
4.7	30.0	45.0	57.5	52.5	76	586Y4470(1)T0(2)	R586Y4470(1)T0(2)
5.6	30.0	45.0	57.5	52.5	76	586Y4560(1)T0(2)	R586Y4560(1)T0(2)
6.8	35.0	50.0	57.5	52.5	76	586Y4680(1)T0(2)	R586Y4680(1)T0(2)
8.2	45.0	56.0	57.5	52.5	76	586Y4820(1)T0(2)	R586Y4820(1)T0(2)
Capacitance Value (µF)	**T (mm)**	**H (mm)**	**L (mm)**	**Lead Spacing (S)**	**dV/dt (V/µs)**	**KEMET Part Number**	**Customer Part Number**

(1) Insert lead and packaging code. See table for available options.
(2) M = ±20%, K = ±10%

Preliminary

chanhvinh.com

Soldering Process

The implementation of the RoHS directive has resulted in the selection of SnAuCu (SAC) alloys or SnCu alloys as primary solder. This has increased the liquidus temperature from 183ºC for SnPb eutectic alloys to 217 – 221ºC for the new alloys. As a result, the heat stress to the components, even in wave soldering, has increased considerably due to higher pre-heat and wave temperatures. Polypropylene capacitors are especially sensitive to heat (the melting point of polypropylene is 160 – 170ºC). Wave soldering can be destructive, especially for mechanically small polypropylene capacitors (with lead spacing of 5 – 15 mm), and great care must be taken during soldering. The recommended solder profiles from KEMET should be used. Please consult KEMET with any questions. In general, the wave soldering curve from IEC Publication 61760-1 Edition 2 serves as a solid guideline for successful soldering. See Figure 1.

Reflow soldering is not recommended for through-hole film capacitors. Exposing capacitors to a soldering profile in excess of the recommended limits may result in degradation of or permanent damage to the capacitors.

Do not place the polypropylene capacitor through an adhesive curing oven to cure resin for surface-mount components. Insert through-hole parts after curing the surface mount parts. Consult KEMET to discuss the actual temperature profile in the oven, if through-hole components must pass through the adhesive curing process. A maximum of two soldering cycles is recommended. Allow time for the capacitor surface temperature to return to normal before the second soldering cycle.

Preliminary

Manual Soldering Recommendations

The following is the recommendation for manual soldering with a soldering iron.

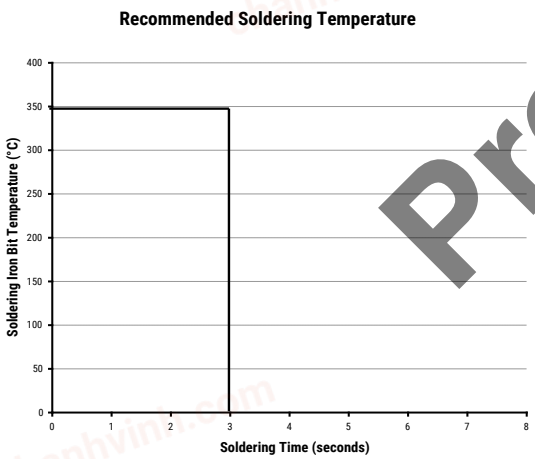

Soldering iron tip temperature should be set at 350°C (+10°C maximum), with the soldering duration not to exceed 3 seconds.

Wave Soldering Recommendations

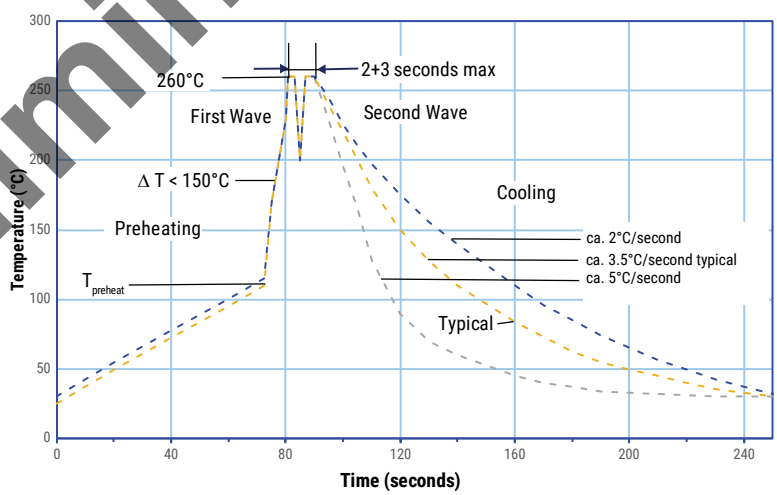

Figure 1

chanhvinh.com

Soldering Process cont.

Wave Soldering Recommendations cont.

1. The table indicates the maximum set-up temperature of the soldering process.
Figure 1

Dielectric Film Material	Maximum Preheat Temperature		Maximum Peak Soldering Temperature	
	Capacitor Pitch ≤ 15 mm	Capacitor Pitch > 15 mm	Capacitor Pitch ≤ 15 mm	Capacitor Pitch > 15 mm
Polyester	130°C	130°C	270°C	270°C
Polypropylene	110°C	130°C	260°C	270°C
Paper	130°C	140°C	270°C	270°C
Polyphenylene Sulphide	150°C	160°C	270°C	270°C

2. The maximum temperature measured inside the capacitor: set the temperature so that the maximum temperature is below the.

Dielectric Film Material	Maximum Temperature Measured Inside the Element
Polyester	160°C
Polypropylene	110°C
Paper	160°C
Polyphenylene Sulphide	160°C

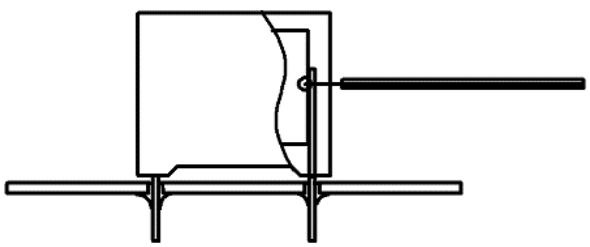

Temperature monitored inside the capacitor.

Preliminary

Selective Soldering Recommendations

Selective dip soldering is a variation of reflow soldering. In this method, the printed circuit board with through-hole components to be soldered is preheated and transported over the solder bath, as in normal flow soldering, without touching the solder. When the board is over the bath, it is stopped. Pre-designed solder pots are lifted from the bath with molten solder only at the places of the selected components, and then pressed against the lower surface of the board to solder the components.

The temperature profile for selective soldering is similar to the double-wave flow soldering outlined in this document. **However, instead of two baths, there is only one with a time from 3 to 10 seconds.** In selective soldering, the risk of overheating is greater than in double-wave flow soldering. Great care must be taken so that the parts do not overheat.

chanhvinh.com

Mounting

Resistance to Vibration and Mechanical Shock

AEC-Q200 Mechanical Stress Tests:

Mechanical Shock	**MIL-SDT-202 Method 213**	Test condition C Peak value 100 g, duration 6 ms, half-sine-wave (see MIL-HDBK for details)
Vibration	**MIL-SDT-202 Method 204**	5 g for 20 minutes, 12 cycles each of 3 orientations Use 8"X5" PCB, 0.031" thick. 7 secure points on one 8" side and 2 secure points at corners of opposite sides. Parts mounted within 2" from any secure point. Test from 10 – 2,000 Hz.

The capacitors are designed for PCB mounting. The stand-off pipes must be in good contact with the printed circuit board. The capacitors with pitch ≤ 22.5 mm can be mechanically fixed by the leads, for pitch > 22.5 mm, the capacitor body has to be properly fixed (e.g. clamped or glued).

Construction

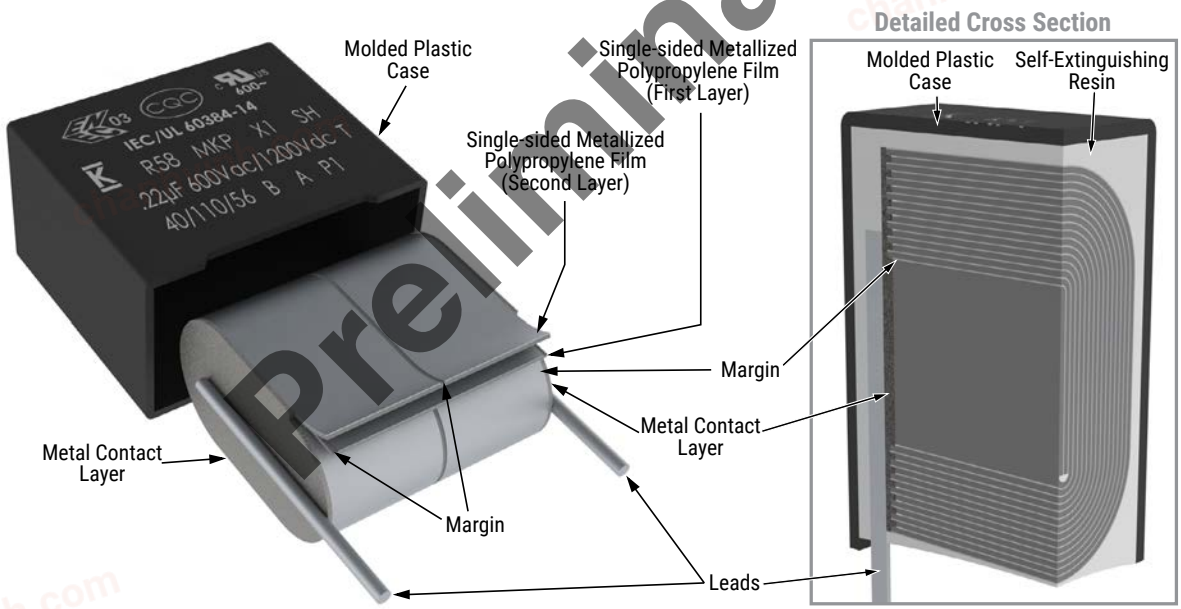

Winding Scheme

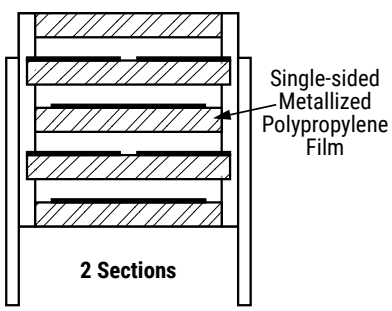

Preliminary

chanhvinh.com

Construction cont.

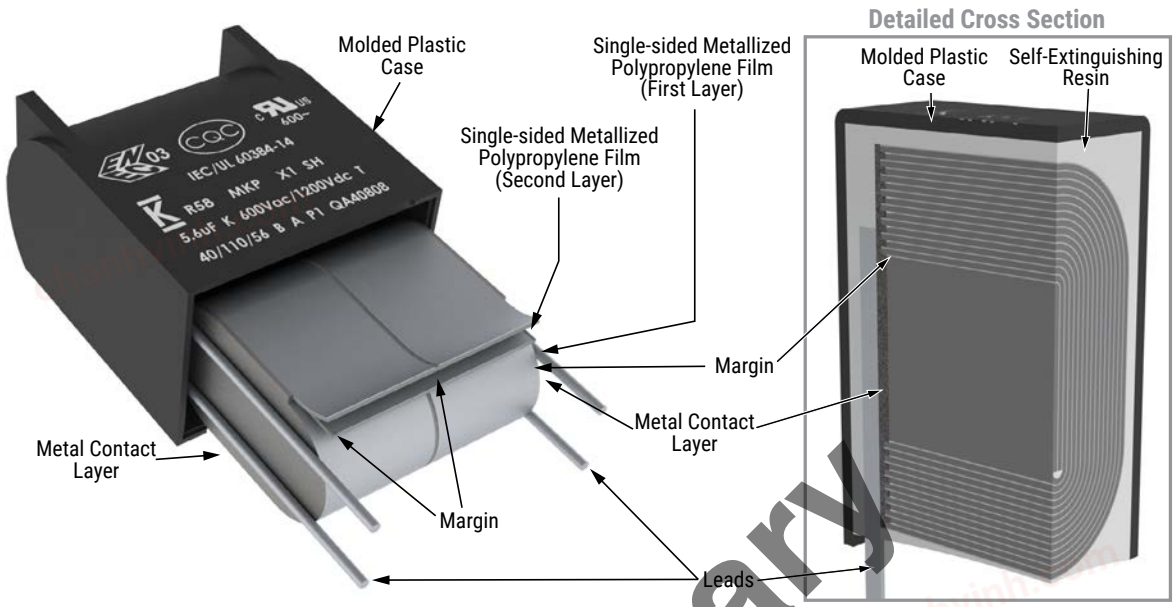

Marking

Lead Spacing 15 mm, 22.5 mm, and 27.5 mm

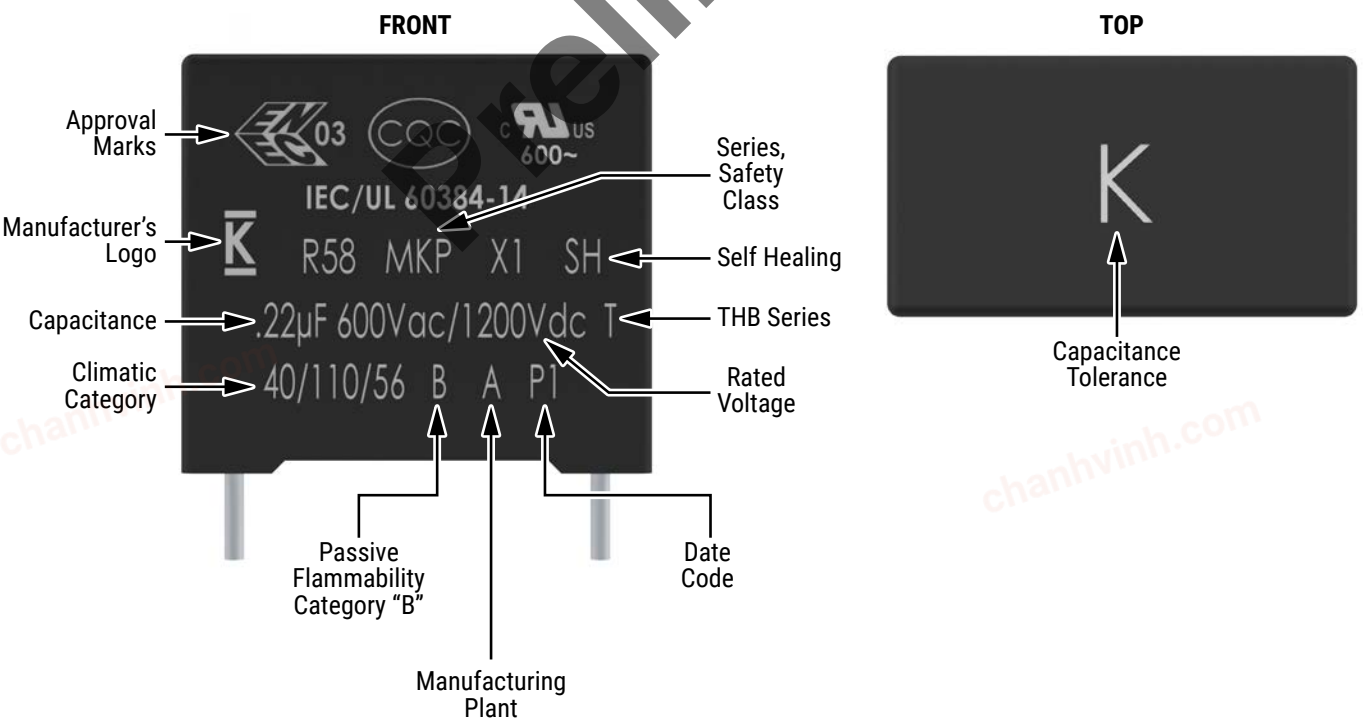

Preliminary

chanhvinh.com

Marking cont.

Lead Spacing 27.5 mm alternative*, 37.5 mm and 52.5 mm in rectangular box

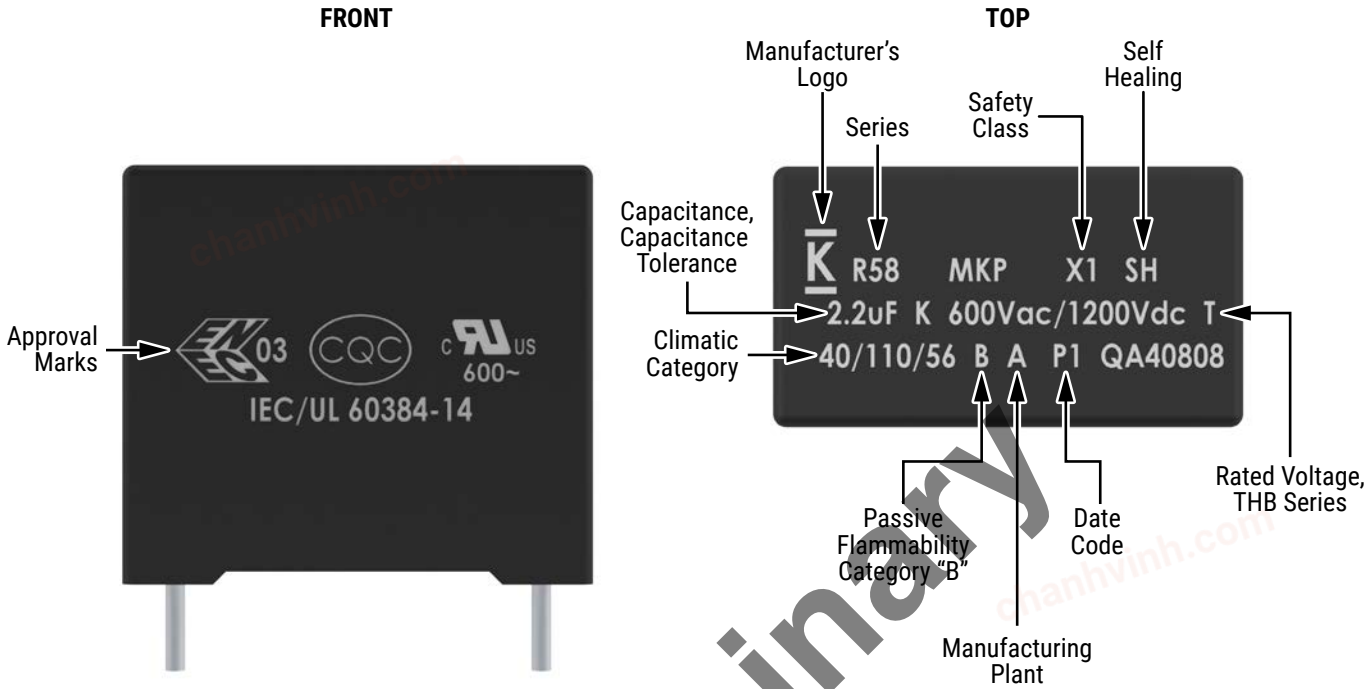

** Differences caused by technology (clichee, laser or ink jet) and production line*

Preliminary

chanhvinh.com

Marking cont.

Lead Spacing 52.5 mm in Arc Shaped Design Case

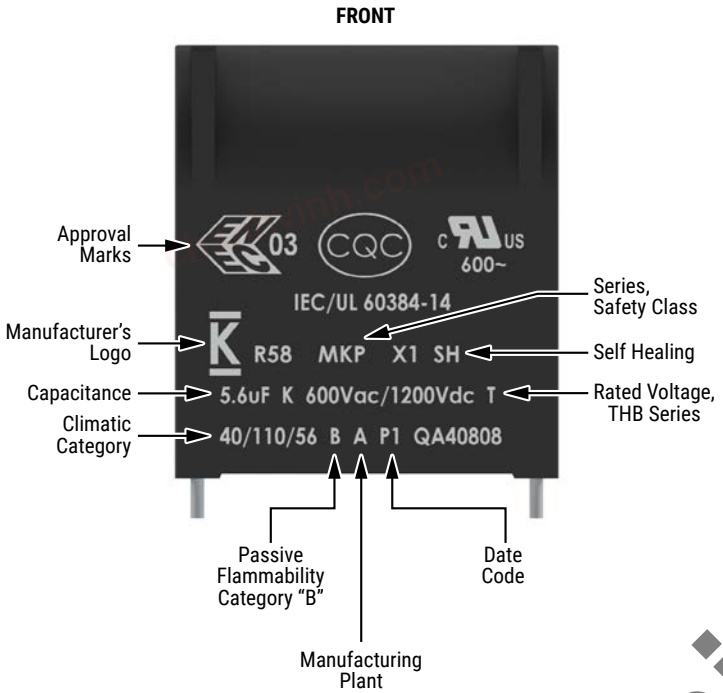

** Differences caused by technology (clichee, laser or ink jet) and production line*

Manufacturing Date Code (IEC-60062)

Year	Code	Month	Code
2020	M	January	1
2021	N	February	2
2022	P	March	3
2023	R	April	4
2024	S	May	5
2025	T	June	6
2026	U	July	7
2027	V	August	8
2028	W	September	9
2029	X	October	O
2030	A	November	N
2031	B	December	D
2032	C		
2033	D		
2034	E		
2035	F		
2036	H		
2037	J		
2038	K		
2039	L		
2040	M		

Preliminary

chanhvinh.com

Packaging Quantities

Lead Spacing	Thickness (mm)	Height (mm)	Length (mm)	Bulk Short Leads	Bulk Long Leads		Standard Reel ø 355 mm	Large Reel ø 500 mm	Ammo Taped	Pizza
Lead And Packaging Code:				00 - JA - JB JE - JH	JM	40 - 50	GY	CK	DQ	BB
15	5	11	18	2,000	1,250	1,000	600	1,250	800	1,122
	6	12	18	1,750	1,000	900	500	1,000	680	935
	7.5	13.5	18	1,000	800	700	350	800	500	748
	8.5	14.5	18	1,000	650	500	300	700	440	663
	10	16	18	750	550	500	270	600	380	561
	11	19	18	450	400	350	–	500	340	510
22.5	6	15	26.5	805	450	500	–	700	464	660
	7	16	26.5	700	450	500	–	550	380	564
	8.5	17	26.5	468	350	300	–	450	280	468
	10	18.5	26.5	396	350	300	–	350	235	396
	11	20	26.5	360	200	250	–	350	217	360
	13	22	26.5	300	150	200	–	300	–	300
27.5	11	20	32	560	336	336	–	350	–	300
	13	22	32	480	288	288	–	300	–	250
	14	28	32	352	176	176	–	–	–	230
	18	33	32	256	128	128	–	–	–	170
	22	37	32	168	112	112	–	–	–	150
37.5	11	22	42	420	252	252	–	–	–	210
	13	24	42	360	216	216	–	–	–	175
	16	28.5	42	216	108	108	–	–	–	140
	19	32	42	192	96	96	–	–	–	119
	20	40	42	126	84	84	–	–	–	112
	24	44	42	108	72	72	–	–	–	91
	30	45	42	90	60	60	–	–	–	77
52.5	30	45	57.5	–	–	–	–	–	–	27
	35	50	57.5	–	–	–	–	–	–	23
	45	56	57.5	–	–	–	–	–	–	18

Preliminary

chanhvinh.com

Lead Taping & Packaging (IEC 60286–2)

Figure 1 – Lead Spacing 15 mm

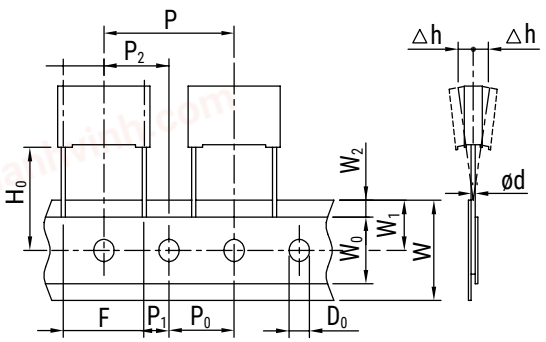

Figure 2 – Lead Spacing 22.5 & 27.5 mm

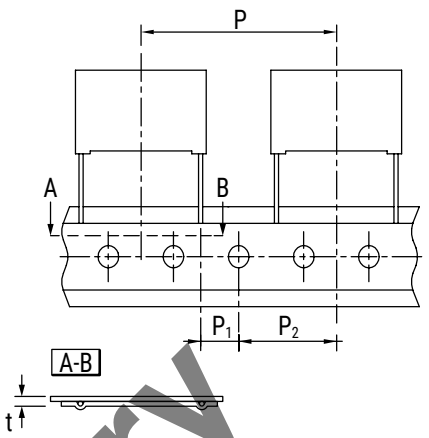

Taping Specification

Description	Symbol	Dimensions (mm)			
		Lead Space			Tol.
		15	22.5	27.5	
		Fig. 2	Fig. 3	Fig. 3	
Lead Wire Diameter	d	0.6–0.8	0.8	0.8	±0.05
Taping Lead Space	P	25.4	38.1	38.1	±1
Feed Hole Lead Space *	P_0	12.7	12.7	12.7	±0.2 **
Centering of the Lead Wire	P_1	5.2	7.8	5.3	±0.7
Centering of the Body	P_2	12.7	19.05	19.05	±1.3
Lead Spacing (Pitch) ***	F	15	22.5	27.5	+0.6/–0.1
Component Alignment	Δh	0	0	0	±2
Height of Component from Tape Center	H_0 ****	18.5	18.5	18.5	±0.5
Carrier Tape Width	W	18	18	18	+1/–0.5
Hold Down Tape Width	W_0	10	10	10	Minimum
Hole Position	W_1	10	10	10	±0.5
Hold Down Tape Position	W_2	3	3	3	Maximum
Feed Hole Diameter	D_0	4	4	4	±0.2
Total Tape Thickness	t	0.7	0.7	0.7	±0.2

** 15 mm also available*
*** Maximum of 1 mm on 20 lead spaces*
**** Pitches 15 mm and 10 mm taped to 7.5 mm (crimped leads) available upon request*
***** H_0 = 16.5 mm is available upon request*

Preliminary

chanhvinh.com

Lead Taping & Packaging (IEC 60286–2) cont.

Ammo Specifications

Dimensions (mm)		
H	W	T
360	340	59

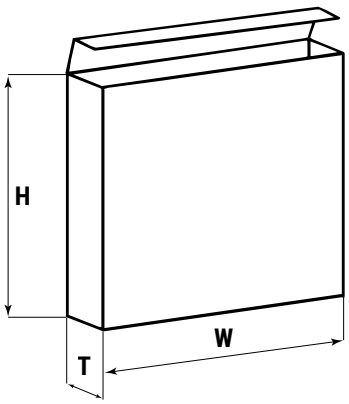

Reel Specifications

Reel Size	Dimensions (mm)		
	D	H	W
Standard	355	30	55 Maximum
Large	500	25	

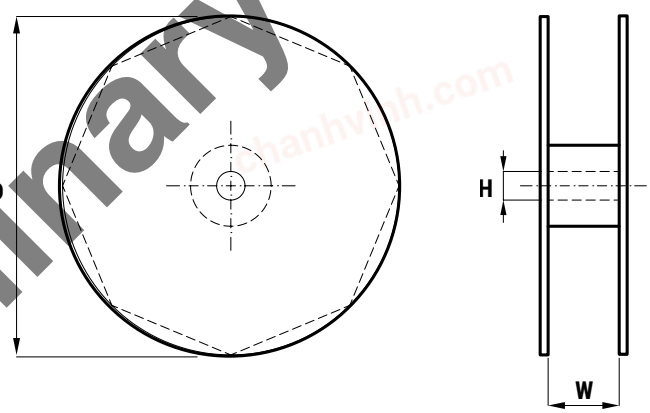

Preliminary

chanhvinh.com

KEMET Electronics Corporation Sales Offices

For a complete list of our global sales offices, please visit www.kemet.com/sales.

Disclaimer

All product specifications, statements, information and data (collectively, the "Information") in this datasheet are subject to change. The customer is responsible for checking and verifying the extent to which the Information contained in this publication is applicable to an order at the time the order is placed. All Information given herein is believed to be accurate and reliable, but it is presented without guarantee, warranty, or responsibility of any kind, expressed or implied.

Statements of suitability for certain applications are based on KEMET Electronics Corporation's ("KEMET") knowledge of typical operating conditions for such applications, but are not intended to constitute – and KEMET specifically disclaims – any warranty concerning suitability for a specific customer application or use. The Information is intended for use only by customers who have the requisite experience and capability to determine the correct products for their application. Any technical advice inferred from this Information or otherwise provided by KEMET with reference to the use of KEMET's products is given gratis, and KEMET assumes no obligation or liability for the advice given or results obtained.

Although KEMET designs and manufactures its products to the most stringent quality and safety standards, given the current state of the art, isolated component failures may still occur. Accordingly, customer applications which require a high degree of reliability or safety should employ suitable designs or other safeguards (such as installation of protective circuitry or redundancies) in order to ensure that the failure of an electrical component does not result in a risk of personal injury or property damage.

Although all product–related warnings, cautions and notes must be observed, the customer should not assume that all safety measures are indicated or that other measures may not be required.

Preliminary

KEMET is a registered trademark of KEMET Electronics Corporation.