chanhvinh.com

PHE426MJ4220JR05

Aliases (F426JF222J630C, PHE426MJ4220JJ01R05)

Not for New Design

PHE426/F426, Film, Metallized Polypropylene, General Purpose, 2,200 pF, 5%, 630 VDC, 85°C, 5 mm

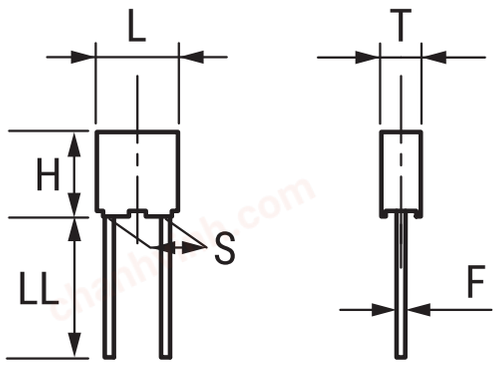

Click here for the 3D model.

General Information	
Series	PHE426/F426
Dielectric	Metallized Polypropylene
Style	Radial
Features	Pulse
RoHS	Yes
Termination	Tinned Wire
Lead	Wire Leads
Typical Component Weight	0.172 g
Notes	Series Replaced by R75.

Dimensions	
L	7.2mm MAX
H	6.5mm MAX
T	2.5mm MAX
S	5mm +/-0.4mm
LL	5mm NOM
F	0.5mm NOM

Packaging Specifications	
Packaging	Bulk, Bag
Packaging Quantity	2000

Specifications	
Capacitance	2,200 pF
Tolerance	5%
Voltage DC	630 VDC, 466 VDC (105C)
Voltage AC	250 VAC
Temperature Range	-55/+105°C
Rated Temperature	85°C
Dissipation Factor	0.05% 1kHz, 0.25% 100kHz
Insulation Resistance	100 GOhms
Max dV/dt	30 V/us
Inductance	6 nH

Statements of suitability for certain applications are based on our knowledge of typical operating conditions for such applications, but are not intended to constitute - and we specifically disclaim - any warranty concerning suitability for a specific customer application or use. This Information is intended for use only by customers who have the requisite experience and capability to determine the correct products for their application. Any technical advice inferred from this Information or otherwise provided by us with reference to the use of our products is given gratis, and we assume no obligation or liability for the advice given or results obtained.

© 2006 - 2026 YAGEO