chanhvinh.com

KEMET Part Number: PHBC14-1R2A0187V

(UALP141R2A0187)

KEMET, PHBC, AC Line Filters, Normal Mode, 187 uH, 20%

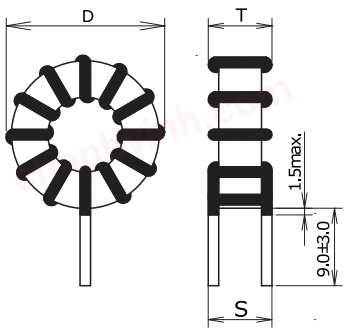

General Information	
Series:	PHBC
Style:	Through-Hole
Features:	Switching Power Suppy Outlet, DC-DC Converter, Phase Compensation, Noise Solution
RoHS:	Yes
Miscellaneous:	60 (K) Temperature Rise Max.

Specifications	
Inductance:	187 uH (0.1 MHz)
Inductance Tolerance:	20%
Current:	8 A
Temperature Range:	-40/+125°C
DC Resistance:	37.6 mOhms

Dimensions	
D	34mm MAX
T	19.4mm MAX
LL	9mm +/-3mm
S	15mm NOM

Packaging Specifications	
Packaging:	Tray
Packaging Quantity:	120
Weight:	52 g

Statements of suitability for certain applications are based on our knowledge of typical operating conditions for such applications, but are not intended to constitute - and we specifically disclaim - any warranty concerning suitability for a specific customer application or use. This Information is intended for use only by customers who have the requisite experience and capability to determine the correct products for their application. Any technical advice inferred from this Information or otherwise provided by us with reference to the use of our products is given gratis, and we assume no obligation or liability for the advice given or results obtained.

© 2006 - 2019 KEMET