chanhvinh.com

PHBC10-0R8A0038V

Aliases (UALP100R8A0038)

Differential Mode Chokes - Power, KEMET, PHBC, Through-Hole, Normal Mode, 38 uH, 20%

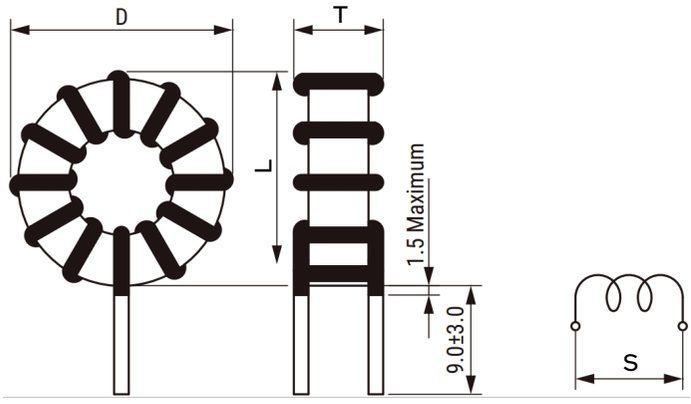

Click here for the 3D model.

General Information	
Series	PHBC
Style	Through-Hole
Features	Switching Power Suppy Outlet, DC-DC Converter, Phase Compensation, Noise Solution
RoHS	Yes
Miscellaneous	15 (K) Temperature Rise Max.
Core	Fe-Ni

Dimensions	
D	21.5mm MAX
L	21.5mm MAX
T	11.7mm MAX
LL	9mm +/-3mm
S	8mm NOM
Wire Size	0.8mm

Specifications	
Inductance	38 uH
Inductance Tolerance	20%
Rated Current	3 A
Temperature Range	-40/+125°C
DC Resistance	31.2 mOhms

Packaging Specifications	
Packaging	Tray
Packaging Quantity	240
Typical Component Weight	11 g

Statements of suitability for certain applications are based on our knowledge of typical operating conditions for such applications, but are not intended to constitute - and we specifically disclaim - any warranty concerning suitability for a specific customer application or use. This Information is intended for use only by customers who have the requisite experience and capability to determine the correct products for their application. Any technical advice inferred from this Information or otherwise provided by us with reference to the use of our products is given gratis, and we assume no obligation or liability for the advice given or results obtained.

© 2006 - 2026 YAGEO