chanhvinh.com

Current Sensors

Fluxgate-Based Residual Current Sensor, FG-R05 Series

Overview

The FG-R05 series sensor is a high-sensitivity AC and DC leakage current sensor with individual open drain alarms and an analog output for leakage current indication. In addition, its integrated test coil can be initiated by a test input to perform a functional alarm test. The UL 2231 version (*4GA) contains 2 AC alarms to comply with CCID5 and CCID20.

Applications

Typical applications include residual current sensor for In-Cable Control and Protection Devices (IC-CPD) or Wallbox.

Benefits

- Open-loop, fluxgate-based current sensor
- PCB mounting
- Digital output of fault detection
- Conforms to IEC 62752:2016/A1:2018 (FG-R05-4A and FG-R05-04BA)
- Conforms to IEC 62955:2018[1] (FG-R05-4A and FG-R05-4BA)
- Conforms to UL 2231-2 CCID20 & CCID5 (FG-R05-4GA)
- RoHS compliant
- 3,000 A surge current capability
- Composed of AEC-Q certified parts
- Compliant with ASIL_B for Safety Element out of Context(SEooC)



Ordering Information

FG-	R05-	4A
Series	Shape	Current Detection Standards
FG	R05 = Vertical	4A = IEC 62752:2016/A1:2018 and UL 2231-2, IEC 62955:20181 4BA = IEC 62752:2016/A1:2018, IEC 62955:2018[1] 4GA = UL 2231-2

[1] *Conditional and dependant on the circuit/system designed as explained in the section Recommended Circuit of this datasheet.*

[2] *Means adopt new PCBA, no change circuit, no change specification, but need to indetify from current PCBA for certification.*

© KEMET Electronics Corporation • One East Broward Boulevard
Fort Lauderdale, FL 33301 USA • 954-766-2800 • www.kemet.com

chanhvinh.com

Dimensions in mm

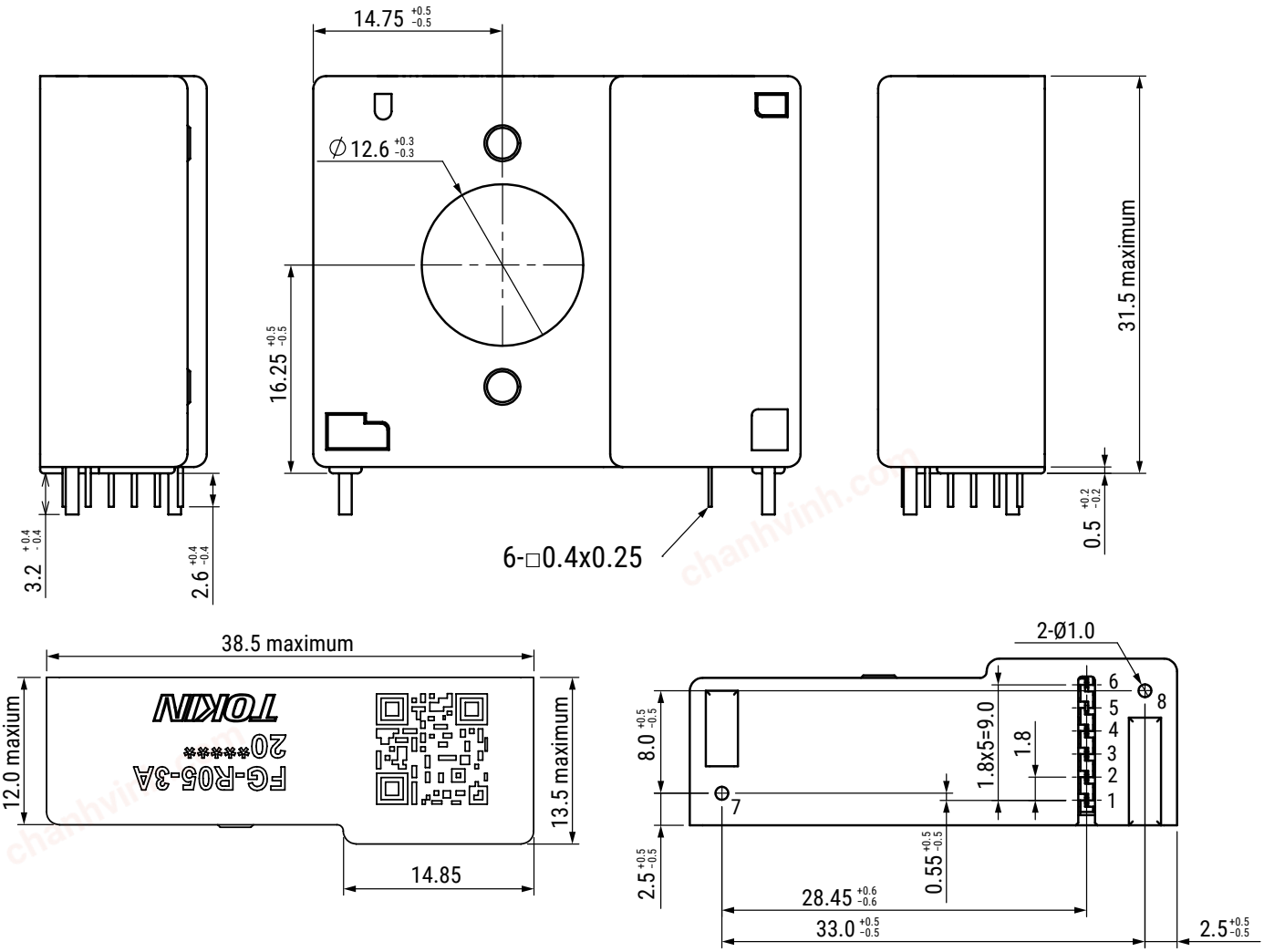

Pin Number	Symbol	
	FG-R05-4A, FG-R05-4BA	FG-R05-4GA
1	VDD	VDD
2	GND	GND
3	AOUT	AOUT
4	DC Fault	AC Fault(CCID5)
5	AC Fault	AC Fault(CCID20
6	TEST	TEST
7-8	Dummy	Dummy

chanhvinh.com

PCB Footprint - Top View

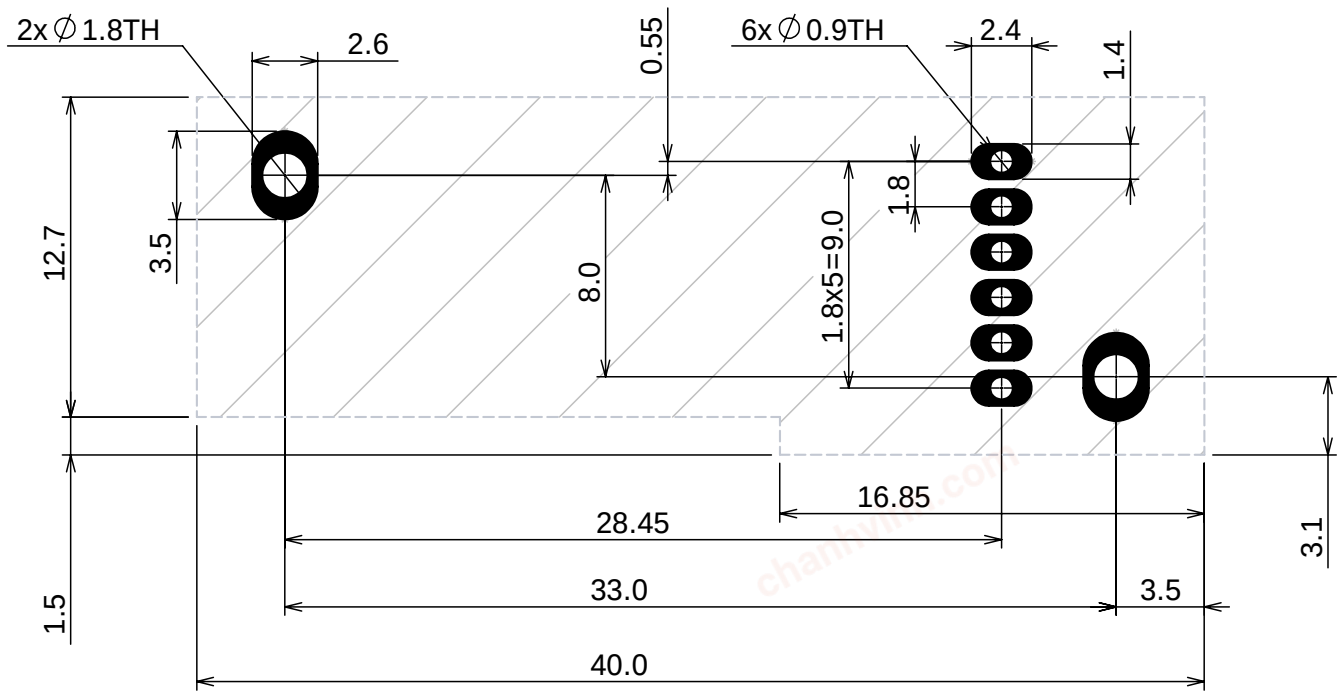

Output Characteristics

Switching Operation

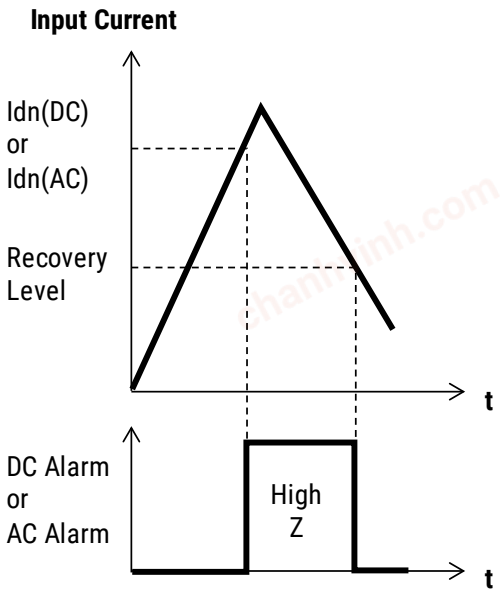

When the residual current exceeds the threshold level (Idn(DC) or Idn(AC)), PIN 4 (DC Alarm) or PIN 5 (AC Alarm) will change from low level to high impedance. Each output goes back from high impedance to low level when residual current falls below recovery level.

chanhvinh.com

Output Characteristics (cont.)

PIN 3 Analog Output – DC Characteristics

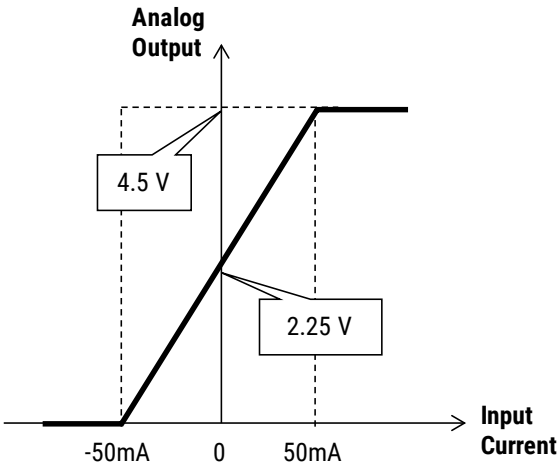

Output State

FG-R05-4A

DC Alarm	AC Alarm	State
GND	GND	Normal Condition
High Impedance	GND	DC Detection Current ≥ 6 mA
GND	High Impedance	AC Detection Current ≥ 20 mA
High Impedance	High Impedance	DC Detection Current ≥ 6 mA and AC Detection Current ≥ 20 mA

Temperature of primary wire should not exceed 105°C.
The rise time of the supply voltage is 50 us to 100 ms.

FG-R05-4BA

DC Alarm	AC Alarm	State
GND	GND	Normal Condition
High Impedance	GND	DC Detection Current ≥ 6 mA
GND	High Impedance	AC Detection Current ≥ 30 mA
High Impedance	High Impedance	DC Detection Current ≥ 6 mA and AC Detection Current ≥ 30 mA

Temperature of primary wire should not exceed 105°C.
The rise time of the supply voltage is 50 us to 100 ms.

FG-R05-4GA

DC Alarm	AC Alarm	State
GND	GND	Normal Condition
High Impedance	GND	AC Detection Current ≥ 6 mA
High Impedance	High Impedance	AC Detection Current ≥ 6 mA and AC Detection Current ≥ 20 mA

Temperature of primary wire should not exceed 105°C.
The rise time of the supply voltage is 50 us to 100 ms.

chanhvinh.com

Output Characteristics (cont.)

Frequency Characteristics of Analog Output

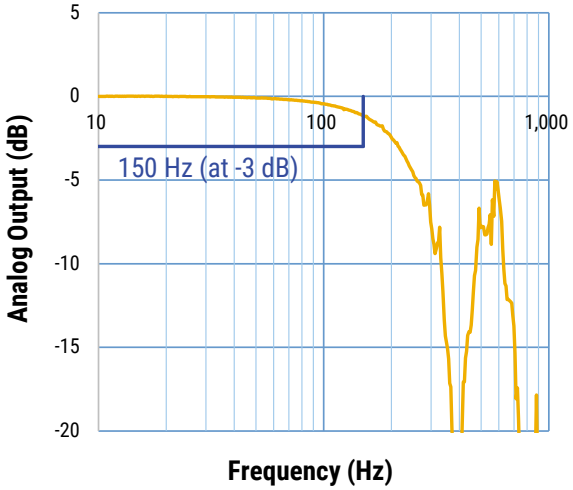

Frequency Characteristics of Response Value (FG-R05-4A)

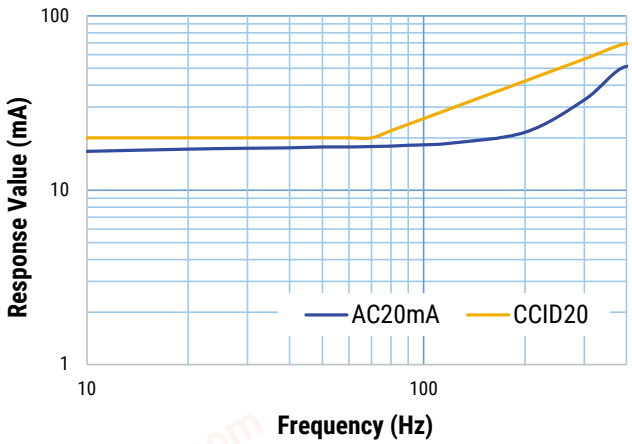

Frequency Characteristics of Response Value (FG-R05-4BA)

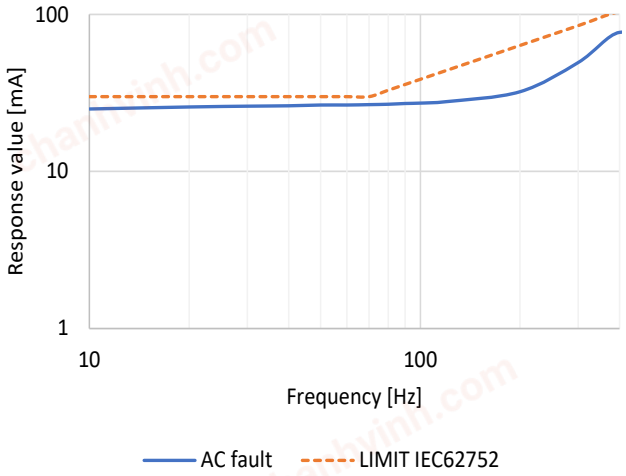

Frequency Characteristics of Response Value (FG-R05-4GA)

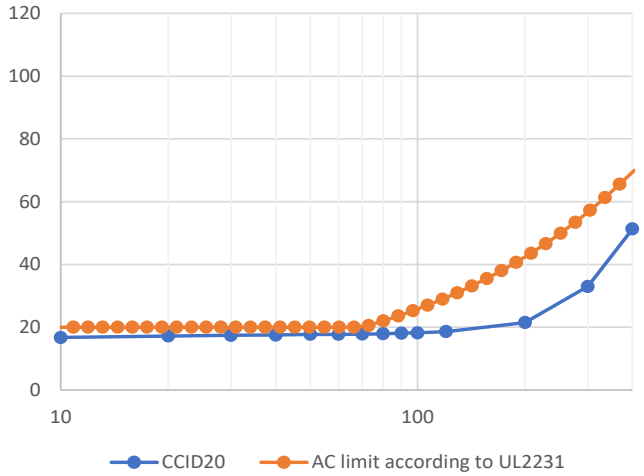

chanhvinh.com

Output Characteristics (cont.)

Trip Current of Pulsating DC at Phase 0°, 90°, 180°

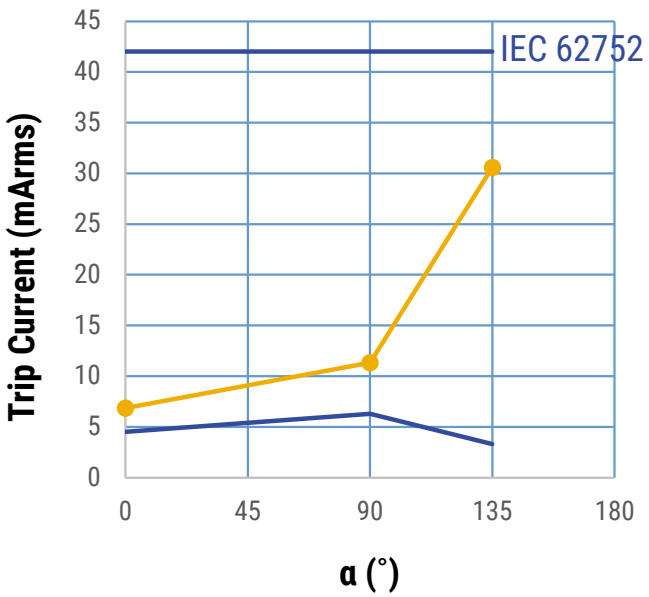

Trip Current of AC + DC

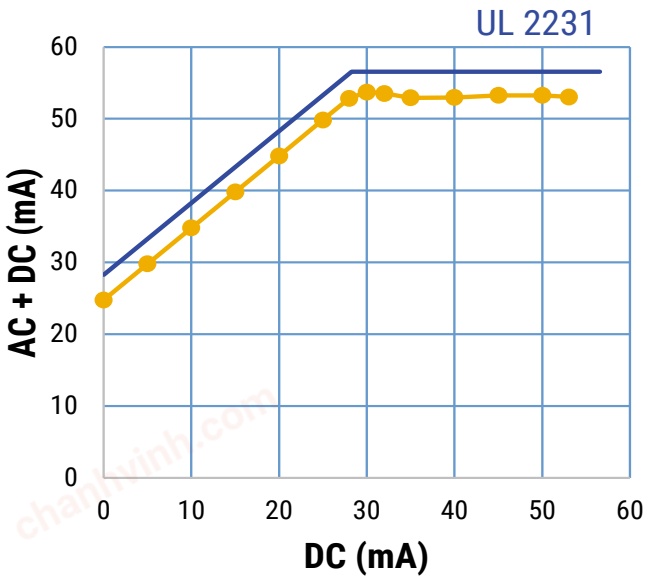

Trip Current of AC + DC (FG-R05-4GA)

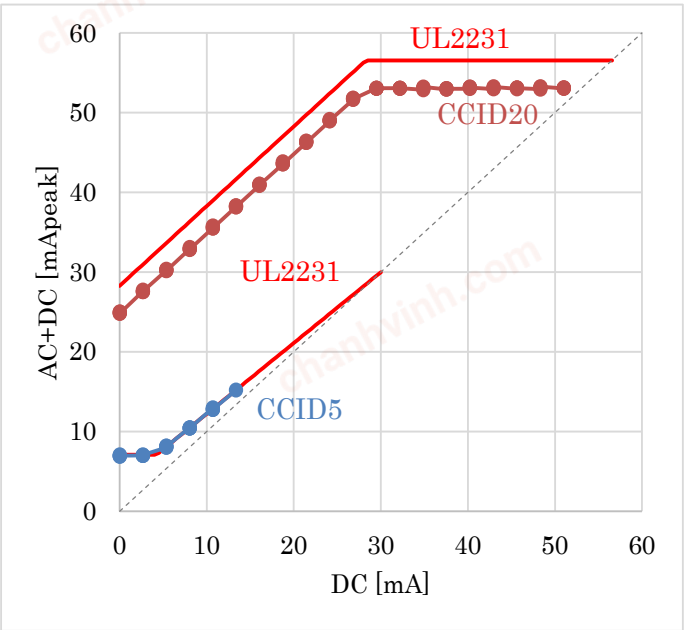

Above data are not guaranteed values, for reference only.

chanhvinh.com

Environmental Compliance

FG sensors are RoHS compliant.

Specifications

Item	Performance Characteristics
Primary Rated Voltage (Phase/Line)	230/400 V
Primary Nominal Current	80/40 A Maximum (1 phase/3 phase)
Supply Voltage Range	4.75 – 5.25 V (5 V typical)
Maximum Input Voltage of Digital Output	Supply Voltage + 0.3 V
Input Voltage Range of TEST (LOW)	0.0 – 0.6 V
Input Voltage Range of TEST (HIGH)	2.5 V - Supply Voltage
Maximum Sink Current of Digital Output	10 mA
Current Consumption	13 mA (at measurement 0 mA)
Operating Temperature Range	−40°C to +105°C
Storage Temperature Range	−40°C to +105°C

Tests

ESD Test

DC Detection Current within specifications as per Table 1 – Ratings & Part Number Reference after ESD test.

Parameter	Result
Electrostatic Discharge Voltage Human-Body Model (HBM) R = 1,500 Ω, C = 100 pF, U = ±2,000 V	Passed
Electrostatic Discharge Voltage Charged-Device Model (CDM) U = ±800 V	Passed

chanhvinh.com

Tests (cont.)

EMC Test

DC Alarm and AC Alarm do not malfunction during noise stimulation.

Parameter	Conditions	Result
IEC 61000-4-3 Radiated, radio-frequency, electromagnetic field immunity	20 V/m, 80 MHz – 1 GHz 80% AM 1 kHz	Passed
ISO 11452-2 (ALSE) Electrical disturbances from narrowband radiated electromagnetic energy	50 V/m 200 MHz – 800 MHz 80% AM 1 kHz, 800 MHz – 2 GHz PM	Passed
ISO 11452-4 (BCI) Electrical disturbances from narrowband radiated electromagnetic energy	100 mA 20 MHz – 200 MHz 80% AM 1 kHz	Passed
IEC 62955 § 9.18.2 Surge current immunity test	Peak 3,000 A Virtual front time 8 µs Virtual time to half value 20 µs	Passed

Dielectric Strength

Parameter	Conditions	Values
$U_{W, prim-sec}$	Impulse (1.2 µs/50 µs), PIN 1-6 vs insulated primary wire, 5 pulse -> polarity +, 5 pulse -> polarity -	5,500 V_{rms}
U_d	Test voltage, 60 seconds PIN 1-6 vs insulated primary wire	1,500 V_{rms}
$U_{PDx1.5}$	Partial discharge voltage, PIN 1-6 vs insulated primary wire * acc. to table 24	1,200 V_{rms}
$U_{PDx1.875}$	Partial discharge voltage, PIN 1-6 vs insulated primary wire * acc. to table 24	1,500 V_{rms}

** IEC 61800-5-1:2007*

chanhvinh.com

Table 1 – Ratings & Part Number Reference

Part Number	Measurement Range (mA)	DC Detection Current[1] (mA)	AC Detection Current[1 2] (mArms)	DC Alarm Response Time (ms)	AC Alarm Response Time (ms)
FG-R05-4A	−50 - +50	4.5 typical 3 minimum 6 maximum	17.5 typical 15 minimum 20 maximum (at 55 Hz)	280 typical, 1,000 maximum (at measurement = 6 mA) 24 typical, 250 maximum (at measurement = 60 mA) 6 typical, 15 maximum (at measurement = 300 mA)	60 typical, 250 maximum (at measurement = 30 mArms) 20 typical, 100 maximum (at measurement = 60 mArms) 8 typical, 20 maximum (at measurement = 150 mArms) 7 typical, 10 maximum (at measurement = 264 mArms) 7 typical, 10 maximum (at measurement > 5 Arms)
FG-R05-4BA	−50 - +50		27.5 typical 25 minimum 30 maximum (at 55 Hz)		60 typical, 250 maximum (at measurement = 30 mArms) 20 typical, 100 maximum (at measurement = 60 mArms) 8 typical, 15 maximum (at measurement = 150 mArms) 7 typical, 10 maximum (at measurement > 5 Arms)

Part Number	Measurement Range (mA)	CCID5 detection Current[1] (mA)	CCID20 detection Current[1] (mArms)	DC Alarm Response Time (ms)	AC Alarm Response Time (ms)
FG-R05-4GA	−50 - +50	5 typical 4 minimum 6 maximum (at 60 Hz)	15 typical 17.5 minimum 20 maximum (at 60 Hz)	200 maximum (at measurement = 6 mA) 100 maximum (at measurement = 20 mA) 20 maximum (at measurement = 150 mA) 10 maximum (at measurement = 264 mA)	200 maximum (at measurement = 20 mArms) 20 maximum (at measurement = 150 mArms) 10 maximum (at measurement = 264 mArms)

[1] *Recovery level = detection current/2.*

[2] *Frequency characteristic of AC detection current = −1% typical, −2% minimum at 45 Hz/55 Hz and +1% typical, +2% maximum at 65 Hz/55 Hz.*

Part Number	PIN 3 AOUT Sensitivity (V/A)	PIN 3 AOUT Offset Voltage (V)	PIN 3 AOUT Frequency Range (Hz)	Hole Diameter (mm)	Weight (g)
FG-R05-4A	40 typical	2.25 typical	150 maximum (at -3 dB)	Φ 12.6	20
FG-R05-4BA					
FG-R05-4GA					

chanhvinh.com

Recommended Wire Configurations

In Case of Insulated Wire

Three phase system < 480 V

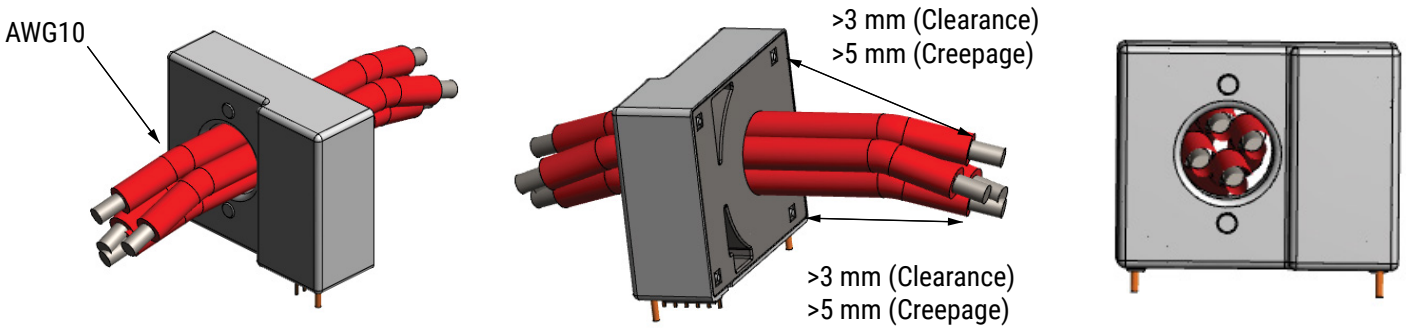

In Case of Bare Wire

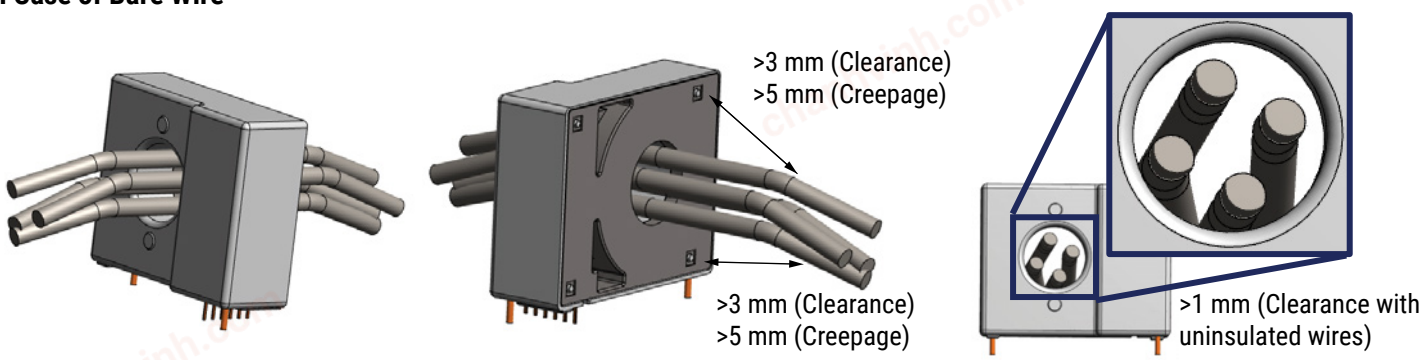

Reinforced insulation, insulation material group III, pollution degree 2, altitude < 5,000 m and overvoltage category II. Please take enough creepage distance between each pin.

chanhvinh.com

Soldering Process

Wave Soldering	Preheating temperature	100 – 140°C
	Preheating time	within 40 seconds
	Heating temperature	260°C
	Heating time	within 10 seconds

Packaging

Type	Packaging Type	Pieces Per Box
FG	Tray	300

The product is packed in antistatic trays.

Marking

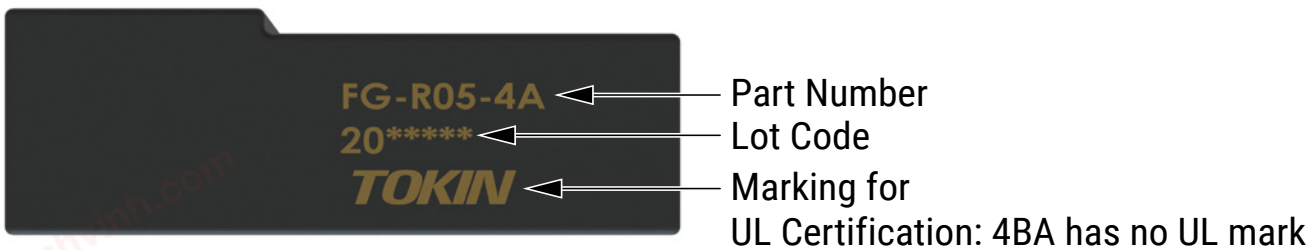

Lot Code	
1st digit = Manufacturing Line Number	1 : Line No.1 2 : Line No.2
2nd digit = Year	1 = 2021 2 = 2022 3 = 2023 A = 2030 B = 2031
3rd digit = Month of the Year	1 = January 2 = February to A = October B = November C = December
4th and 5th digit = Day of the Month	01 = 1st to 31 = 31st
6th to 10th digit = Serial Number	00001 00002 etc

chanhvinh.com

Self-Test Operation

FG-R05-4A
FG-R05-4BA

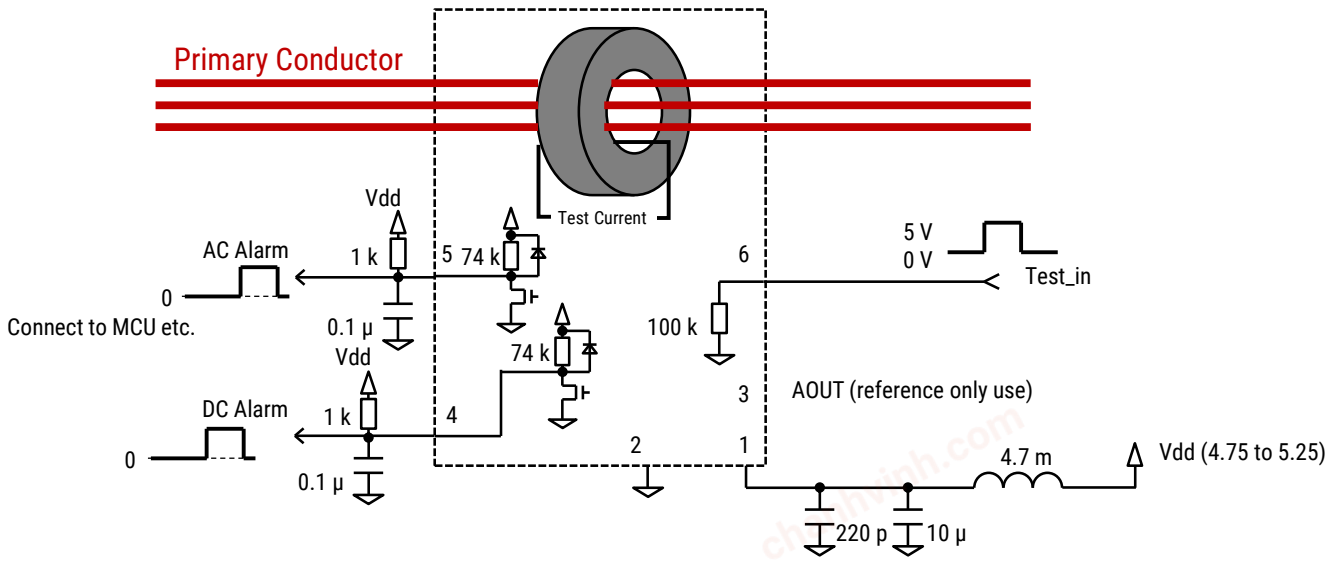

Time Chart

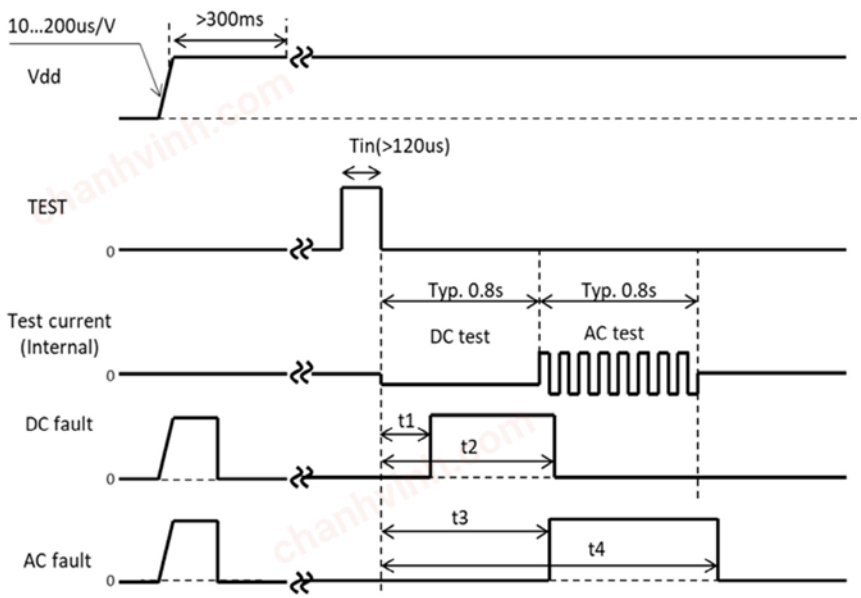

Parameter	Minimum	Maximum
t1	0.12	0.60
t2	0.80	1.30
t3	0.70	1.20
t4	1.40	2.10

chanhvinh.com

Self-Test Operation cont.

FG-R05-4GA

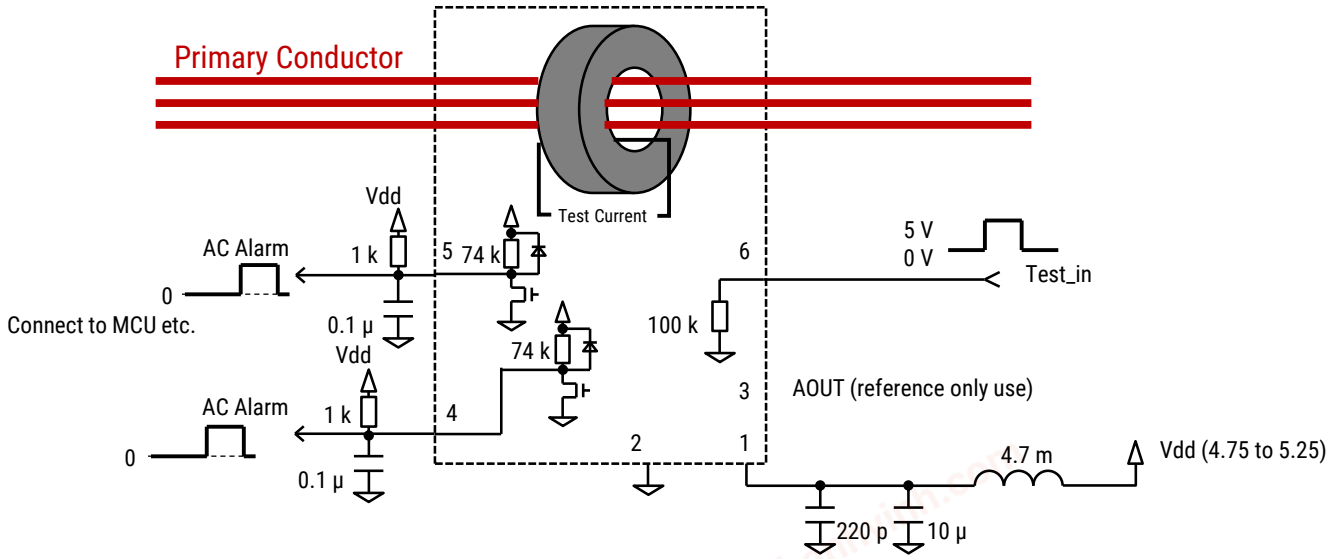

Time Chart

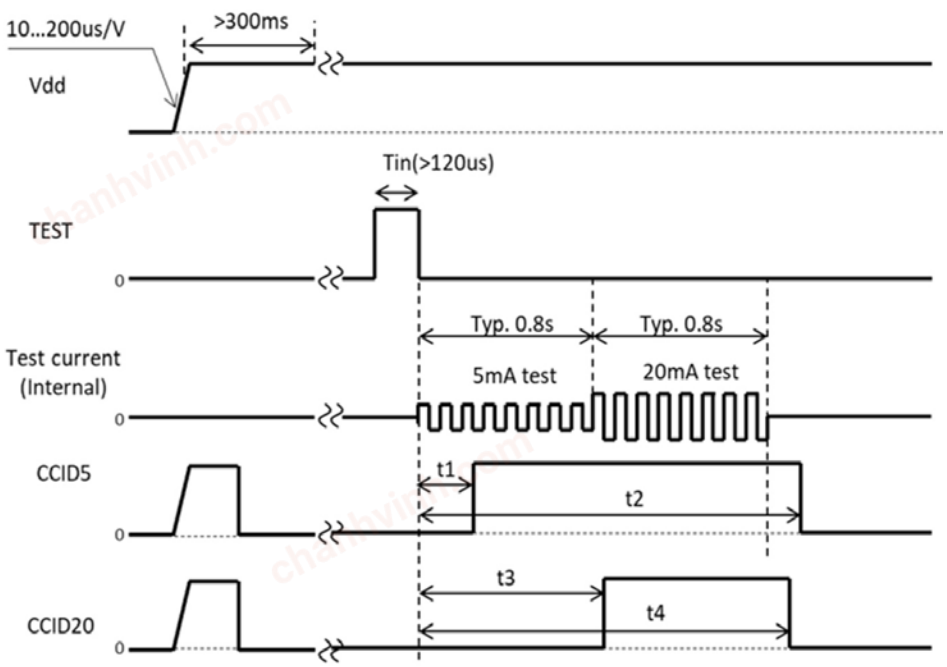

Parameter	Minimum	Maximum
t1	0.03	0.20
t2	1.40	2.10
t3	0.70	1.20
t4	1.40	2.10

chanhvinh.com

Recommended Circuit

Typical Configuration Diagram

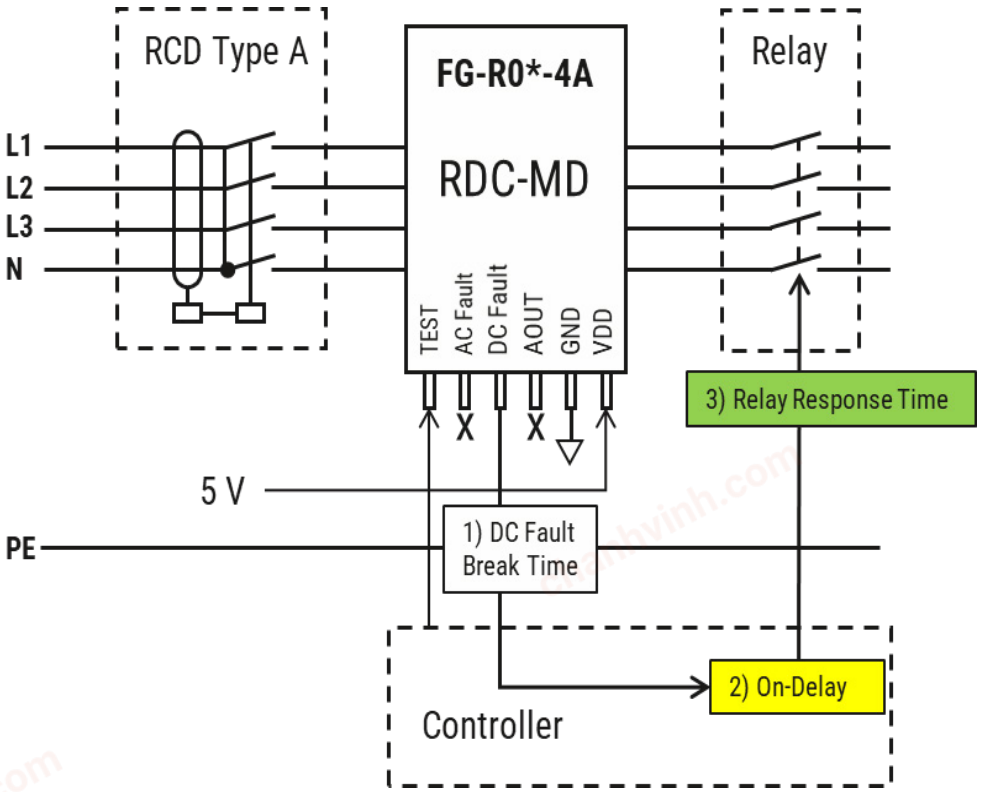

Appendix 3 Regarding Applying RDC-MD for 4A Type

FG-R0*-4A is tripped DC fault with high AC residual current of more than 60 mA.
When using the sensor as RDC-MD, break times are faster than required non-operating time.
You need to set a delay time to keep above minimum and below maximum response time at non-operating time.
An example of setting the delay time for the controller is shown above.
The delay is only needed when tripping on DC only. If both alarms are used fro tripping no delay is required.

chanhvinh.com

Recommended Circuit (cont.)

Calculation Example Based on Typical Values

- **On-delay needed: 69 ms**
- **Relay break time (typical): 15 ±4 ms (11 ~ 19 ms)**

Residual Currents	IEC62955 Requirement		FG-R05-4A	2) Add Delay (ms)	3) Add Relay Response Time (ms)
	Break Times (ms)	Response Non Operating Time (ms)	1) DC Fault Break Time (ms)		
DC 6 mA	≤10,000	N/A	≤1,000	≤1,069	**<1,088**
DC 60 mA	≤300	N/A	≤100	≤169	**<188**
DC 200 mA	≤100	N/A	≤12	≤81	**≤100**
≤AC 30 mA	N/A	No DC Tripping	No DC Tripping	No DC Tripping	No DC Tripping
AC 60 mA	N/A	≥300	No DC Tripping	No DC Tripping	No DC Tripping
AC 150 mA	N/A	>80	>6	≥75	**≥86**
AC 5 A	N/A	>80	>0	≥69	**≥80**

+69 +19 +69 +11

chanhvinh.com

Handling Precautions

Precautions for Product Storage

Current sensors should be stored in normal working environments. While the sensors are quite robust in other environments, exposure to high temperatures, high humidity, corrosive atmospheres, and long-term storage degrade solderability.

KEMET recommends that maximum storage temperature not exceed 85°C and atmospheres should be free of chlorine and sulfur-bearing compounds. Temperature fluctuations should be minimized to avoid condensation on the parts. Avoid storage near strong magnetic fields, as they can magnetize the product and cause its characteristics to change. Limit ambient magnetic fields to 50e or less.

For optimized solderability, the stock of current sensors should be used within 12 months of receipt.

Before Using Fluxgate-Based Residual Current Sensors

- Do NOT drop or apply any other mechanical stress, as such stresses may change performance characteristics.
- Do NOT exceed 260°C for 10 seconds when soldering. This is the maximum heat resistance grade of these sensors. Use a low-corrosion type flux when soldering.
- Do NOT allow strong static electricity near the sensor, as the circuit uses ICs. Static electricity can cause damage. Take static electricity precautions when handling.
- The case is Insulation Materials Group III. When desiging the primary wire, be careful of clearance and creepage distance from the input/output terminal.

chanhvinh.com

KEMET Electronics Corporation Sales Offices

For a complete list of our global sales offices, please visit www.kemet.com/sales.

Disclaimer

YAGEO Corporation and its affiliates do not recommend the use of commercial or automotive grade products for high reliability applications or manned space flight.

All product specifications, statements, information and data (collectively, the "Information") in this datasheet are subject to change. The customer is responsible for checking and verifying the extent to which the Information contained in this publication is applicable to an order at the time the order is placed. All Information given herein is believed to be accurate and reliable, but it is presented without guarantee, warranty, or responsibility of any kind, expressed or implied.

Statements of suitability for certain applications are based on KEMET Electronics Corporation's ("KEMET") knowledge of typical operating conditions for such applications, but are not intended to constitute – and KEMET specifically disclaims – any warranty concerning suitability for a specific customer application or use. The Information is intended for use only by customers who have the requisite experience and capability to determine the correct products for their application. Any technical advice inferred from this Information or otherwise provided by KEMET with reference to the use of KEMET's products is given gratis, and KEMET assumes no obligation or liability for the advice given or results obtained.

Although KEMET designs and manufactures its products to the most stringent quality and safety standards, given the current state of the art, isolated component failures may still occur. Accordingly, customer applications which require a high degree of reliability or safety should employ suitable designs or other safeguards (such as installation of protective circuitry or redundancies) in order to ensure that the failure of an electrical component does not result in a risk of personal injury or property damage.

Although all product–related warnings, cautions and notes must be observed, the customer should not assume that all safety measures are indicated or that other measures may not be required.

When providing KEMET products and technologies contained herein to other countries, the customer must abide by the procedures and provisions stipulated in all applicable export laws and regulations, including without limitation the International Traffic in Arms Regulations (ITAR), the US Export Administration Regulations (EAR) and the Japan Foreign Exchange and Foreign Trade Act.

KEMET is a registered trademark of KEMET Electronics Corporation.