chanhvinh.com

ELG109M063AT6AA

ELG, Aluminum Electrolytic, 10,000 uF, 20%, 63 VDC, -40/+105°C, 10 mm

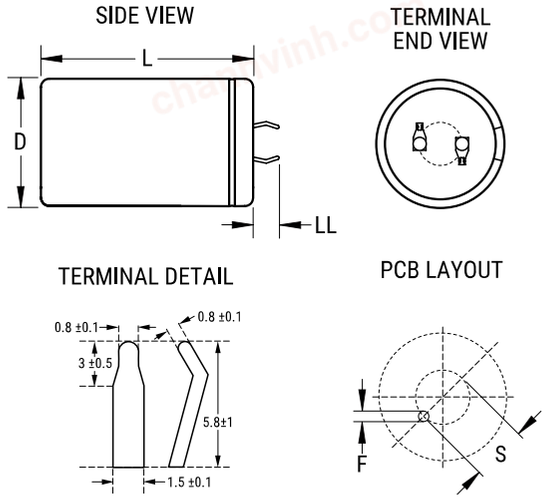

Click here for the 3D model.

General Information	
Series	ELG
Dielectric	Aluminum Electrolytic
Description	Snap-In, Aluminum Electrolytic
RoHS	Yes
Lead	2 Pin

Dimensions	
D	35mm +/-1mm
L	50mm +/-2mm
S	10mm +/-0.5mm
LL	5.8mm +/-1mm
F	2mm +/-0.1mm

Packaging Specifications	
Packaging	Bulk, Bag

Specifications	
Capacitance	10,000 uF
Tolerance	20%
Voltage DC	63 VDC, 79 VDC (Surge)
Temperature Range	-40/+105°C
Rated Temperature	105°C
Life	2000 Hrs
Dissipation Factor	25% 120Hz 20C
ESR	0.033 Ohms (120Hz 20C)
Ripple Current	4.4 Amps (120Hz 105C)
Leakage Current	3 mA (5min 20°C)
Impedance Ratio at -25C	2
Impedance Ratio at -40C	6

Statements of suitability for certain applications are based on our knowledge of typical operating conditions for such applications, but are not intended to constitute - and we specifically disclaim - any warranty concerning suitability for a specific customer application or use. This Information is intended for use only by customers who have the requisite experience and capability to determine the correct products for their application. Any technical advice inferred from this Information or otherwise provided by us with reference to the use of our products is given gratis, and we assume no obligation or liability for the advice given or results obtained.

© 2006 - 2026 YAGEO