chanhvinh.com

CAS26C221KARFC

CAS SMD SFTY 250, Ceramic, 220 pF, 10%, 250 VAC, X7R, Industrial Grade, Safety MLCC, X1/Y2, 2211 / 5628

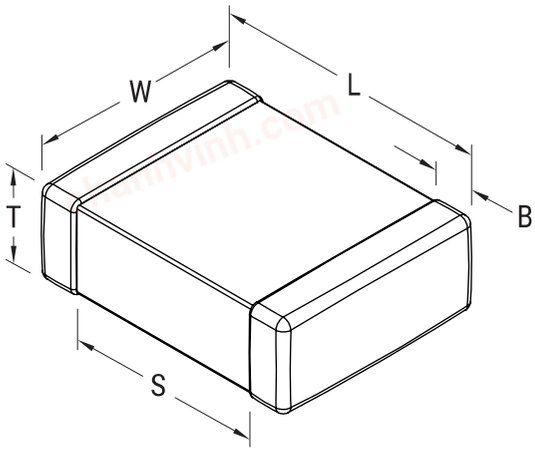

Click here for the 3D model.

General Information	
Series	CAS SMD SFTY 250
Style	SMD Chip
Description	Industrial Grade, Safety MLCC
RoHS	Yes
Termination	Tin
Qualifications	TUV, UL, cUL
Halogen Free	Yes
Shelf Life	52 Weeks
MSL	1

Dimensions	
L	5.7mm +/-0.4mm
W	2.8mm +/-0.3mm
T	1.6mm +/-0.2mm
S	4mm MIN
B	0.6mm +/-0.3mm
Case Code (EIA / mm)	2211 / 5628

Packaging Specifications	
Packaging	T&R
Packaging Quantity	1000

Specifications	
Capacitance	220 pF
Measurement Condition	1 kHz 1.0Vrms
Tolerance	10%
Voltage AC	250 VAC (X1), 250 VAC (Y2)
Temperature Range	-55/+125°C
Temp. Coefficient	X7R
Capacitance Change with Reference to +25°C and 0 VDC Applied (TCC)	15%, 1kHz 1.0Vrms
Dissipation Factor	2.5% 1 kHz 1.0Vrms
Insulation Resistance	10 GOhms
Safety Class	X1/Y2

Statements of suitability for certain applications are based on our knowledge of typical operating conditions for such applications, but are not intended to constitute - and we specifically disclaim - any warranty concerning suitability for a specific customer application or use. This Information is intended for use only by customers who have the requisite experience and capability to determine the correct products for their application. Any technical advice inferred from this Information or otherwise provided by us with reference to the use of our products is given gratis, and we assume no obligation or liability for the advice given or results obtained.

© 2006 - 2026 YAGEO