chanhvinh.com

C757U332MZWDBAWL50

C700KJY SFTY X1-440 Y2-300, Ceramic, 3,300 pF, 20%, 440 VAC (X1), 300 VAC (Y2), Y5U, 7.5 mm

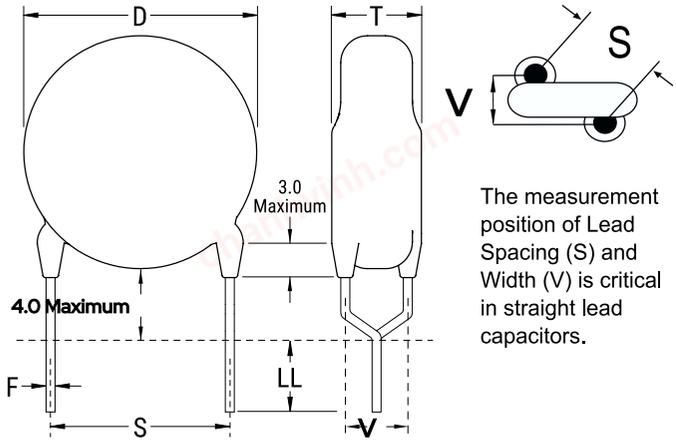

The measurement position of Lead Spacing (S) and Width (V) is critical in straight lead capacitors.

Click here for the 3D model.

General Information	
Series	C700KJY SFTY X1-440 Y2-300
Style	Radial Disc
RoHS	Yes
Termination	Tin
Failure Rate	N/A
Qualifications	TUV, UL, cUL
Shelf Life	104 Weeks

Dimensions	
D	12mm MAX
T	5mm MAX
S	7.5mm +/-1mm
LL	5mm +/-1mm
F	0.6mm +/-0.1mm
V	2.1mm +/-0.5mm

Packaging Specifications	
Packaging	Bulk, Bag
Packaging Quantity	500

Specifications	
Capacitance	3,300 pF
Tolerance	20%
Voltage AC	440 VAC (X1), 300 VAC (Y2)
Temperature Range	-55/+125°C
Temp. Coefficient	Y5U
Dissipation Factor	5% 1 kHz 5.0Vrms
Insulation Resistance	10 GOhms
Safety Class	X1/Y2
Dielectric Withstanding Voltage	2600 VAC, 60s

Statements of suitability for certain applications are based on our knowledge of typical operating conditions for such applications, but are not intended to constitute - and we specifically disclaim - any warranty concerning suitability for a specific customer application or use. This Information is intended for use only by customers who have the requisite experience and capability to determine the correct products for their application. Any technical advice inferred from this Information or otherwise provided by us with reference to the use of our products is given gratis, and we assume no obligation or liability for the advice given or results obtained.

© 2006 - 2026 YAGEO