chanhvinh.com

C4DEFPQ6260A8TK

C4DE, Film, Metallized Polypropylene, DC Link, 260 uF, 10%, 400 VDC, 45 mm

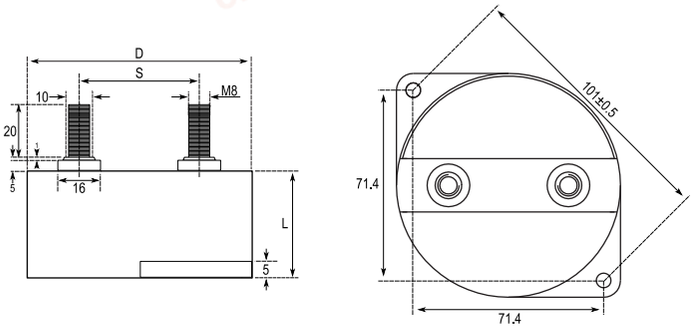

Click here for the 3D model.

General Information	
Series	C4DE
Dielectric	Metallized Polypropylene
Style	Can
RoHS	With Exemptions
REACH	SVHC (Pb – CAS 7439-92-1), SVHC (DBDPE -CAS 84852-53-9)
SCIP Number	8e61f1d3-2fb4-4a11-b365-48e4553d698a
Lead	Threaded Studs M8
Typical Component Weight	341.7 g
Miscellaneous	45 Amps (10kHz, 85C).
Notes	The max torques are: Terminals M8 male: 7 N.m / Fixing Holes of the Plastic Case: 5 N.m.

Dimensions	
D	84mm +/-0.5mm
L	51mm +/-1mm
S	45mm +/-1mm
LL	20mm NOM
F	10mm NOM

Packaging Specifications	
Terminal Type	Flange Mount
Packaging	Bulk, Bag
Packaging Quantity	12

Specifications	
Capacitance	260 uF
Tolerance	10%
Voltage DC	400 VDC
Temperature Range	-40/+85°C
Rated Temperature	85°C
Max dV/dt	20 V/us
Ripple Current	100 Amps (10kHz 25C), 100 Amps (10kHz 45C), 77 Amps (10kHz 65C)
Inductance	32 nH

Statements of suitability for certain applications are based on our knowledge of typical operating conditions for such applications, but are not intended to constitute - and we specifically disclaim - any warranty concerning suitability for a specific customer application or use. This Information is intended for use only by customers who have the requisite experience and capability to determine the correct products for their application. Any technical advice inferred from this Information or otherwise provided by us with reference to the use of our products is given gratis, and we assume no obligation or liability for the advice given or results obtained.

© 2006 - 2026 YAGEO