chanhvinh.com

C317C103K5R5TA7301

GoldMax 300 Comm X7R, Ceramic, 0.01 uF, 10%, 50 VDC, X7R, GoldMax, Commercial Standard, 5.08 mm

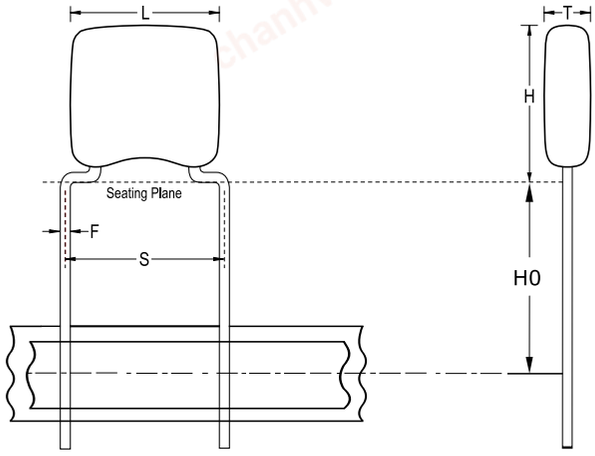

Click here for the 3D model.

General Information	
Series	GoldMax 300 Comm X7R
Style	Radial
Description	GoldMax, Commercial Standard
RoHS	Yes
Termination	Tin
Failure Rate	N/A
Halogen Free	Yes

Dimensions	
L	3.81mm MAX
H	5.08mm MAX
T	2.54mm MAX
S	5.08mm +/-0.78mm
H0	16mm +/-0.5mm
F	0.51mm +0.1/-0.025mm

Packaging Specifications	
Packaging	T&R, 305mm
Packaging Quantity	2500

Specifications	
Capacitance	0.01 uF
Measurement Condition	1 kHz 1.0Vrms
Tolerance	10%
Voltage DC	50 VDC
Dielectric Withstanding Voltage	125 VDC
Temperature Range	-55/+125°C
Temp. Coefficient	X7R
Capacitance Change with Reference to +25°C and 0 VDC Applied (TCC)	0.15, 1kHz 1.0Vrms
Dissipation Factor	2.5% 1 kHz 1.0Vrms
Aging Rate	3% Loss/Decade Hour
Insulation Resistance	100 GOhms

Statements of suitability for certain applications are based on our knowledge of typical operating conditions for such applications, but are not intended to constitute - and we specifically disclaim - any warranty concerning suitability for a specific customer application or use. This Information is intended for use only by customers who have the requisite experience and capability to determine the correct products for their application. Any technical advice inferred from this Information or otherwise provided by us with reference to the use of our products is given gratis, and we assume no obligation or liability for the advice given or results obtained.

© 2006 - 2026 YAGEO