chanhvinh.com

KEMET Part Number: C1812C474J5JACTU

(C1812C474J5JAC7800)

SMD Comm U2J, Ceramic, 0.47 uF, 5%, 50 VDC, U2J, SMD, MLCC, Ultra-Stable, Low Loss, Class I, 1812

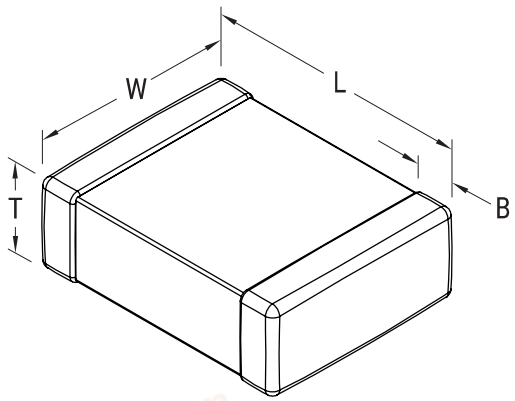

Dimensions	
L	4.5mm +/-0.3mm
W	3.2mm +/-0.3mm
T	1.7mm +/-0.2mm
B	0.6mm +/-0.35mm

Packaging Specifications	
Packaging:	T&R, 180mm, Plastic Tape
Packaging Quantity:	1000

General Information	
Supplier:	KEMET
Series:	SMD Comm U2J
Style:	SMD Chip
Description:	SMD, MLCC, Ultra-Stable, Low Loss, Class I
Features:	Ultra-Stable, Low Loss, Class I
RoHS:	Yes
Termination:	Tin
Marking:	No
Miscellaneous:	Note: Referee time for U2J dielectric for this part number is 1000 hours
Chip Size:	1812
Shelf Life:	78 Weeks
MSL:	1

Specifications	
Capacitance:	0.47 uF
Capacitance Tolerance:	5%
Voltage DC:	50 VDC
Dielectric Withstanding Voltage:	125 VDC
Temperature Range:	-55/+125°C
Temperature Coefficient:	U2J
Dissipation Factor:	0.10% 1kHz 25C
Aging Rate:	0.1% Loss/Decade Hour
Insulation Resistance:	2.128 GOhms

Statements of suitability for certain applications are based on our knowledge of typical operating conditions for such applications, but are not intended to constitute - and we specifically disclaim - any warranty concerning suitability for a specific customer application or use. This Information is intended for use only by customers who have the requisite experience and capability to determine the correct products for their application. Any technical advice inferred from this Information or otherwise provided by us with reference to the use of our products is given gratis, and we assume no obligation or liability for the advice given or results obtained.

© 2006 - 2019 KEMET