chanhvinh.com

KEMET Part Number: C1812C304KBRLCAUTO

Preliminary Datasheet

General Information

Manufacturer:	KEMET
Product Grade:	AUTO
Application:	Automotive
Chips Size:	1812
Temperature Coeffient:	X7R
Part Type Description:	SMD,MLCC
Termination Type:	Tin, Std. Term
Marked:	No
RoHS:	Yes

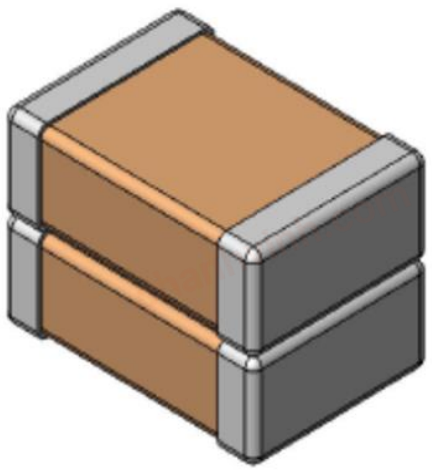

Electrical Specification

Capacitance:	0.30 µF
Rated DC Voltage:	630 VDC
Capacitance Tolerance:	+/-10%
Temperaure Range:	-55ºC / +125ºC
Dissipation Factor @ 25 °C:	<2.5%
Insulation Resistance @ 25 °C:	>0.333 GOhm
Dielectric Strength:	945 V

Part Number/ Ordering Information

C	1812	C	304	K	B	R	L	C	AUTO
Type	**Case Size (L"x W")**	**Specification/ Series**	**Capacitance Code**	**Capacitance Tolerance**	**Rated Voltage (VDC)**	**Dielectric**	**Design**	**Termination Finish**	**Packaging / Orientation**
C = Ceramic	1812	C = Standard	304 = 0.30 µF	K = 10%	B = 630V	R = X7R	KONNEKT	C = 100% Matte Sn	See Packaging and Orientation Information

Packaging and Orientation

Packaging Specifications	**C-SPEC:**			
	AUTO	**AUTO7210**		
Mounting Orientation:	Standard			
Packaging Kind:	7" Tape & Reel	13" Tape & Reel		
Packaging Type:	Embossed Plastic Tape			
Quantity:	500	2000		



Standard

AUTO

AUTO7210

chanhvinh.com

KEMET Part Number: C1812C304KBRLCAUTO

Preliminary Datasheet

Mounting Options

Standard Mounting Orientation
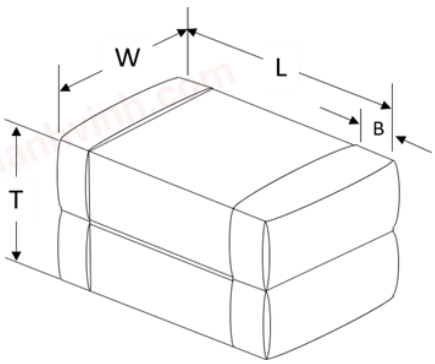

Dimensions (mm)		
Symbol	**Dimension**	**Tolerance**
L	4.5	+/-0.30
W	3.2	+/-0.30
T	3.5	+/-0.40
B	0.6	+/-0.35

Low Loss Mounting Option
N/A

Dimensions (mm)		
Symbol	**Dimension**	**Tolerance**
L		
W		
T		
B		

Standard

(Land Pattern Design Recommendations per IPC-7351)

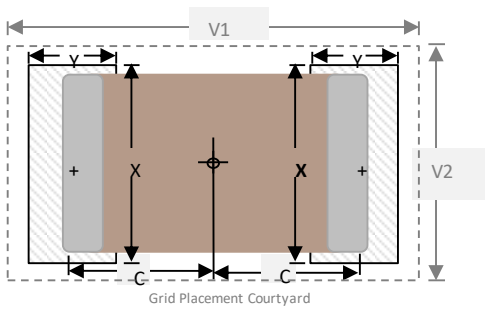

Grid Placement Courtyard

Code (in.)	Metric Size Code	Dimension, mm				
		C	Y	X	V1	V2
1812	4532	2.15	1.60	3.60	6.90	4.60

Low Loss

(Land Pattern Design Recommendations per IPC-7351)

N/A

Code (in.)	Metric Size Code	Dimension, mm				
		C	Y	X	V1	V2
1812	4532					

The Customer acknowledges the following limitations of the prototype samples: (1) prototype samples are manufactured from preliminary designs and manufacturing processes, may not represent final designs, have not been released for commercial use and are not subject to the same quality control procedures applicable to released products; (2) prototype samples are not qualified parts and are provided as-is by KEMET Electronics Corporation, which specifically disclaims any and all warranties and guarantees, explicit or implied, including without limitation the warranties of merchantability and fitness for a particular purpose or use; (3) prototype samples are not intended for commercial use, are provided for engineering evaluation only and are not recommended for use in the Customer's production line; and (4) the Customer assumes the risk of any and all uses that the Customer makes of the prototype samples.

COPYRIGHT KEMET ELECTRONICS CORPORATION 2020, all rights reserved

Revision date: 7/21/2020

chanhvinh.com

KEMET Part Number: C1812C304KBRLCAUTO

Preliminary Datasheet

Soldering Process

Recommended Soldering Technique

All EIA case sizes are limited to solder reflow only.

Recommended Reflow Soldering Profile

KEMET's KONNEKT family of high density surface mount multilayer ceramic capacitors (SMD MLCCs) are compatible with convection and IR reflow techniques. Preheating of these components is recommended to avoid extreme thermal stress. KEMET's recommended profile conditions for convection and IR reflow reflect the profile conditions of the IPC/J-STD-020 standard for moisture sensitivity testing. These devices can safely withstand a maximum of three reflow passes at these conditions.

Profile Feature	Termination Finish
	100% Matte Sn
Preheat/Soak	
Temperature minimum (T_{Smin})	150°C
Temperature maximum (T_{Smax})	200°C
Time (t_S) from T_{Smin} to T_{Smax}	60 – 120 seconds
Ramp-up rate (T_L to T_P)	3°C/second maximum
Liquidous temperature (T_L)	217°C
Time above liquidous (t_L)	60 – 150 seconds
Peak temperature (T_P)	260°C
Time within 5°C of maximum peak temperature (t_P)	30 seconds maximum
Ramp-down rate (T_P to T_L)	6°C/second maximum
Time 25°C to peak temperature	8 minutes maximum

Note : All temperatures refer to the center of the package, measured on the capacitor body surface that is facing up during assembly reflow.

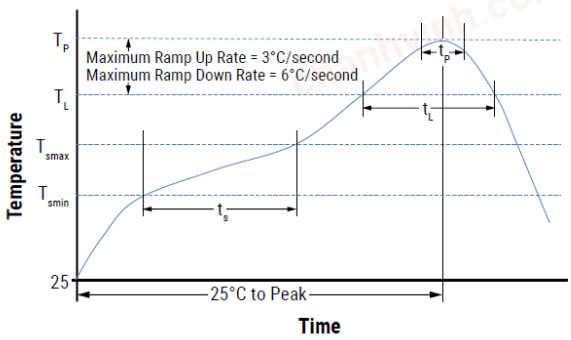

Hand Soldering and Rework

Hand soldering should be performed with care due to the difficulty in process control and performed by trained and qualified personnel. If performed, care should be taken to avoid thermal shock to the capacitor and solder pad damage on the PCB. The iron should be used to heat the solder pad, applying solder between the pad and the component termination, until reflow occurs. Once reflow occurs, the iron should be removed immediately. (Preheating is required when hand soldering to avoid thermal shock.) For removal of a component a dual tip soldering iron (tweezer) is recommended. It is not recommended to reuse removed components.

Storage and Handling

Ceramic chip capacitors should be stored in normal working environments in the original unopened packaging. While the chips themselves are quite robust in other environments, solderability will be degraded by exposure to high temperatures, high humidity, corrosive atmospheres, and long term storage. In addition, packaging materials will be degraded by high temperature – reels may soften or warp and tape peel force may increase. KEMET recommends that maximum storage temperature not exceed 40°C and maximum storage humidity not exceed 70% relative humidity. Temperature fluctuations should be minimized to avoid condensation on the parts and atmospheres should be free of chlorine and sulfur bearing compounds. For optimized solderability chip stock should be used promptly, preferably within one year of receipt.