chanhvinh.com

C1808C330JHGACTU

Aliases (C1808C330JHGAC7800)

SMD Comm C0G HV, Ceramic, 33 pF, 5%, 3,000 VDC, C0G, SMD, MLCC, Ultra-Stable, Low Loss, Class I, 1808 / 4520

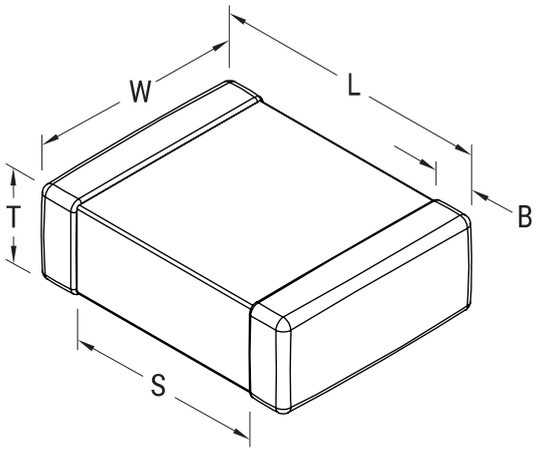

Click here for the 3D model.

General Information	
Series	SMD Comm C0G HV
Style	SMD Chip
Description	SMD, MLCC, Ultra-Stable, Low Loss, Class I
Features	Ultra-Stable, Low Loss, Class I
RoHS	Yes
Termination	Tin
Marking	No
Typical Component Weight	81 mg
Shelf Life	78 Weeks
MSL	1

Dimensions	
L	4.7mm +/-0.5mm
W	2mm +/-0.2mm
T	1.6mm +/-0.15mm
S	2.9mm MIN
B	0.6mm +/-0.35mm
Case Code (EIA / mm)	1808 / 4520

Packaging Specifications	
Packaging	T&R, 180mm, Plastic Tape
Packaging Quantity	1000

Specifications	
Capacitance	33 pF
Measurement Condition	1 MHz 1.0Vrms
Tolerance	5%
Voltage DC	3000 VDC
Dielectric Withstanding Voltage	3,600 VDC
Temperature Range	-55/+125°C
Temp. Coefficient	C0G
Capacitance Change with Reference to +25°C and 0 VDC Applied (TCC)	30 ppm/C, 1MegaHz 1.0Vrms
Dissipation Factor	0.1% 1 MHz 1.0Vrms
Aging Rate	0% Loss/Decade Hour
Insulation Resistance	100 GOhms

Statements of suitability for certain applications are based on our knowledge of typical operating conditions for such applications, but are not intended to constitute - and we specifically disclaim - any warranty concerning suitability for a specific customer application or use. This Information is intended for use only by customers who have the requisite experience and capability to determine the correct products for their application. Any technical advice inferred from this Information or otherwise provided by us with reference to the use of our products is given gratis, and we assume no obligation or liability for the advice given or results obtained.

© 2006 - 2026 YAGEO