chanhvinh.com

C1210X683J1GACAUTO

SMD Auto C0G Flex, Ceramic, 0.068 uF, 5%, 100 VDC, C0G, SMD, MLCC, FT-CAP, Ultra-Stable, Automotive Grade, 1210 / 3225

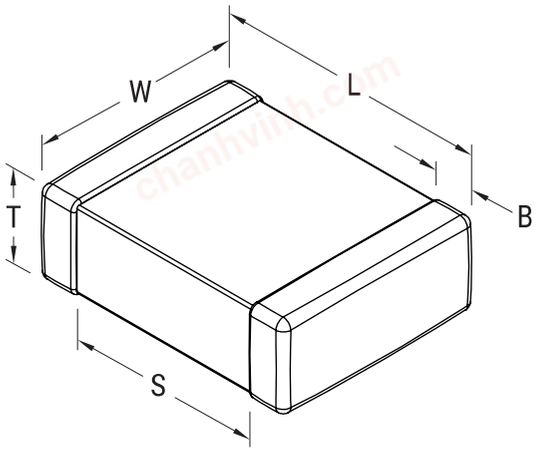

Click here for the 3D model.

General Information	
Series	SMD Auto C0G Flex
Style	SMD Chip
Description	SMD, MLCC, FT-CAP, Ultra-Stable, Automotive Grade
Features	FT-CAP, Ultra-Stable, Automotive Grade
RoHS	Yes
Termination	Flexible Termination
Marking	No
Qualifications	AEC-Q200
Typical Component Weight	40 mg
Shelf Life	78 Weeks
MSL	1

Dimensions	
L	3.3mm +/-0.4mm
W	2.6mm +/-0.3mm
T	1.25mm +/-0.20mm
S	1.5mm MIN
B	0.6mm +/-0.25mm
Case Code (EIA / mm)	1210 / 3225

Packaging Specifications	
Packaging	T&R, 180mm, Plastic Tape
Packaging Quantity	2500

Specifications	
Capacitance	0.068 uF
Measurement Condition	1 kHz 1.0Vrms
Tolerance	5%
Voltage DC	100 VDC
Dielectric Withstanding Voltage	250 VDC
Temperature Range	-55/+125°C
Temp. Coefficient	C0G
Capacitance Change with Reference to +25°C and 0 VDC Applied (TCC)	30 ppm/C, 1kHz 1.0Vrms
Dissipation Factor	0.1% 1 kHz 1.0Vrms
Aging Rate	0% Loss/Decade Hour
Insulation Resistance	14.7059 GOhms

Statements of suitability for certain applications are based on our knowledge of typical operating conditions for such applications, but are not intended to constitute - and we specifically disclaim - any warranty concerning suitability for a specific customer application or use. This Information is intended for use only by customers who have the requisite experience and capability to determine the correct products for their application. Any technical advice inferred from this Information or otherwise provided by us with reference to the use of our products is given gratis, and we assume no obligation or liability for the advice given or results obtained.

© 2006 - 2026 YAGEO