chanhvinh.com

C1210X333KDRAC3316

SMD Auto X7R HV VW80808, Ceramic, 0.033 uF, 10%, 1,000 VDC, X7R, SMD, MLCC, Automotive Grade, 1210 / 3225

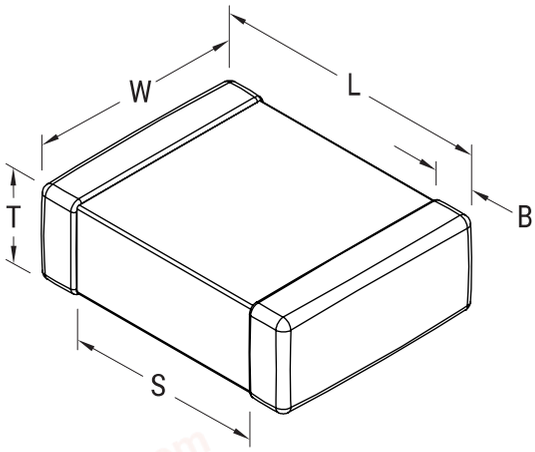

Click here for the 3D model.

General Information	
Series	SMD Auto X7R HV VW80808
Style	SMD Chip
Description	SMD, MLCC, Automotive Grade
Features	VW 80808 Specification Compliant
RoHS	Yes
Termination	Flexible Termination
Failure Rate	N/A
Qualifications	AEC-Q200
Typical Component Weight	85 mg
Shelf Life	152 Weeks

Dimensions	
L	3.3mm +/-0.4mm
W	2.6mm +/-0.3mm
T	2.5mm +/-0.30mm
B	0.6mm +/-0.25mm
Case Code (EIA / mm)	1210 / 3225

Packaging Specifications	
Packaging	T&R, 180mm, Plastic Tape
Packaging Quantity	1000

Specifications	
Capacitance	0.033 uF
Tolerance	10%
Voltage DC	1000 VDC
Dielectric Withstanding Voltage	1,200 VDC
Temperature Range	-55/+125°C
Temp. Coefficient	X7R
Capacitance Change with Reference to +25°C and 0 VDC Applied (TCC)	15%, 1kHz 1.0Vrms
Dissipation Factor	2.5% 1 kHz 1.0Vrms
Insulation Resistance	10 GOhms

Statements of suitability for certain applications are based on our knowledge of typical operating conditions for such applications, but are not intended to constitute - and we specifically disclaim - any warranty concerning suitability for a specific customer application or use. This Information is intended for use only by customers who have the requisite experience and capability to determine the correct products for their application. Any technical advice inferred from this Information or otherwise provided by us with reference to the use of our products is given gratis, and we assume no obligation or liability for the advice given or results obtained.

© 2006 - 2026 YAGEO