chanhvinh.com

KEMET Part Number: C1206X104J3JACAUTO

SMD Auto U2J Flex, Ceramic, 0.1 uF, 5%, 25 VDC, U2J, SMD, MLCC, FT-CAP, Ultra-Stable, Automotive Grade, 1206

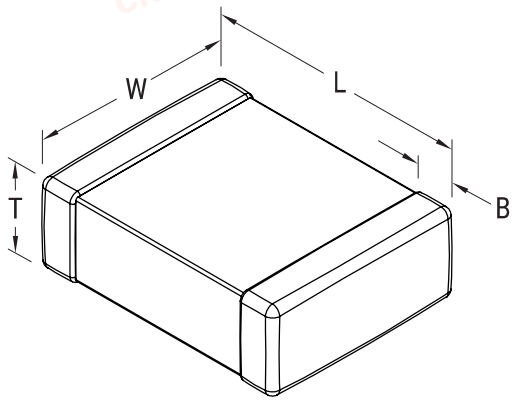

General Information	
Supplier:	KEMET
Series:	SMD Auto U2J Flex
Style:	SMD Chip
Description:	SMD, MLCC, FT-CAP, Ultra-Stable, Automotive Grade
Features:	FT-CAP, Ultra-Stable, Automotive Grade
RoHS:	Yes
Termination:	Flexible Termination
Marking:	No
Qualifications:	AEC-Q200
AEC-Q200:	Yes
Miscellaneous:	Note: Referee time for U2J dielectric for this part number is 1000 hours
Chip Size:	1206

Dimensions	
L	3.3mm +/-0.4mm
W	1.6mm +/-0.35mm
T	0.9mm +/-0.10mm
B	0.6mm +/-0.25mm

Packaging Specifications	
Packaging:	T&R, 180mm, Plastic Tape
Packaging Quantity:	4000

Specifications	
Capacitance:	0.1 uF
Capacitance Tolerance:	5%
Voltage DC:	25 VDC
Dielectric Withstanding Voltage:	62.5 VDC
Temperature Range:	-55/+125C
Temperature Coefficient:	U2J
Dissipation Factor:	0.10% 1kHz 25C
Aging Rate:	0.1% Loss/Decade Hour
Insulation Resistance:	10 GOhms

Statements of suitability for certain applications are based on our knowledge of typical operating conditions for such applications, but are not intended to constitute - and we specifically disclaim - any warranty concerning suitability for a specific customer application or use. This Information is intended for use only by customers who have the requisite experience and capability to determine the correct products for their application. Any technical advice inferred from this Information or otherwise provided by us with reference to the use of our products is given gratis, and we assume no obligation or liability for the advice given or results obtained.

© 2006 - 2019 KEMET