chanhvinh.com

KEMET Part Number: C1206C184KARACAUTO

SMD Auto X7R, Ceramic, 0.18 uF, 10%, 250 VDC, X7R, SMD, MLCC, Temperature Stable, Automotive Grade, 1206

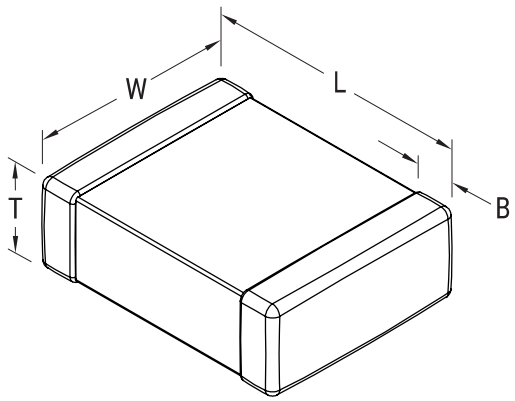

Dimensions	
L	3.2mm +/-0.2mm
W	1.6mm +/-0.2mm
T	1.25mm +/-0.15mm
B	0.5mm +/-0.25mm

General Information	
Supplier:	KEMET
Series:	SMD Auto X7R
Style:	SMD Chip
Description:	SMD, MLCC, Temperature Stable, Automotive Grade
Features:	Temperature Stable, Automotive Grade
RoHS:	Yes
Termination:	Tin
Marking:	No
Qualifications:	AEC-Q200
AEC-Q200:	Yes
Miscellaneous:	Note: Referee time for X7R dielectric for this part number is 1000 hours
Chip Size:	1206
Shelf Life:	78 Weeks
MSL:	1

Packaging Specifications	
Packaging:	T&R, 180mm, Plastic Tape
Packaging Quantity:	2500

Specifications	
Capacitance:	0.18 uF
Capacitance Tolerance:	10%
Voltage DC:	250 VDC
Dielectric Withstanding Voltage:	625 VDC
Temperature Range:	-55/+125°C
Temperature Coefficient:	X7R
Dissipation Factor:	2.50% 1kHz 25C
Aging Rate:	3% Loss/Decade Hour
Insulation Resistance:	556 MOhms

Statements of suitability for certain applications are based on our knowledge of typical operating conditions for such applications, but are not intended to constitute - and we specifically disclaim - any warranty concerning suitability for a specific customer application or use. This Information is intended for use only by customers who have the requisite experience and capability to determine the correct products for their application. Any technical advice inferred from this Information or otherwise provided by us with reference to the use of our products is given gratis, and we assume no obligation or liability for the advice given or results obtained.

© 2006 - 2019 KEMET