chanhvinh.com

C0402C331JATACAUTO

SMD Auto X8G HT150C, Ceramic, 330 pF, 5%, 250 VDC, X8G, SMD, MLCC, High Temperature, Ultra-Stable, Automotive Grade, 0402 / 1005

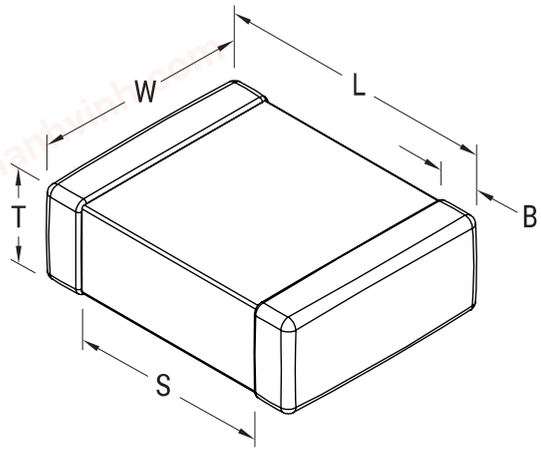

Click here for the 3D model.

General Information	
Series	SMD Auto X8G HT150C
Style	SMD Chip
Description	SMD, MLCC, High Temperature, Ultra-Stable, Automotive Grade
Features	High Temperature, Ultra-Stable, Automotive Grade
RoHS	Yes
Termination	Tin
Marking	No
Qualifications	AEC-Q200
Typical Component Weight	1.16 mg
Shelf Life	78 Weeks
MSL	1

Dimensions	
L	1mm +/-0.05mm
W	0.5mm +/-0.05mm
T	0.55mm +/-0.05mm
S	0.3mm MIN
B	0.3mm +/-0.1mm
Case Code (EIA / mm)	0402 / 1005

Packaging Specifications	
Packaging	T&R, 180mm, Paper Tape
Packaging Quantity	10000

Specifications	
Capacitance	330 pF
Measurement Condition	1 MHz 1.0Vrms
Tolerance	5%
Voltage DC	250 VDC
Dielectric Withstanding Voltage	625 VDC
Temperature Range	-55/+150°C
Temp. Coefficient	X8G
Capacitance Change with Reference to +25°C and 0 VDC Applied (TCC)	30 ppm/C, 1MegaHz 1.0Vrms
Dissipation Factor	0.1% 1 MHz 1.0Vrms
Aging Rate	0% Loss/Decade Hour: Referee Time is 1000 Hours
Insulation Resistance	100 GOhms

Statements of suitability for certain applications are based on our knowledge of typical operating conditions for such applications, but are not intended to constitute - and we specifically disclaim - any warranty concerning suitability for a specific customer application or use. This Information is intended for use only by customers who have the requisite experience and capability to determine the correct products for their application. Any technical advice inferred from this Information or otherwise provided by us with reference to the use of our products is given gratis, and we assume no obligation or liability for the advice given or results obtained.

© 2006 - 2026 YAGEO