chanhvinh.com

Current Sensors

C/CT, High Current AC, Snap-on Type

Electronic Components
KEMET
CHARGED.

Overview

The C/CT series clamp-on current sensors can be used to measure currents in live wires.

Applications

Typical applications include EMS current measurement, high performance distributions boards, power conditioners, power monitoring systems, inverters and industrial machinery.

Benefits

- Compact and slim design
- Flat temperature characteristics
- UL 94 V–0 flame retardant rated case
- RoHS compliant



C/CT-0306

Ordering Information

C/CT-	12	16
Series	Rated Current AC (A)	Diameter (mm)
C/CT	03 = 30 12 = 120	06 = 6 16 = 16



C/CT-1216

© KEMET Electronics Corporation • KEMET Tower • One East Broward Boulevard
Fort Lauderdale, FL 33301 USA • 954-766-2800 • www.kemet.com

chanhvinh.com

Dimensions in mm

C/CT-0306

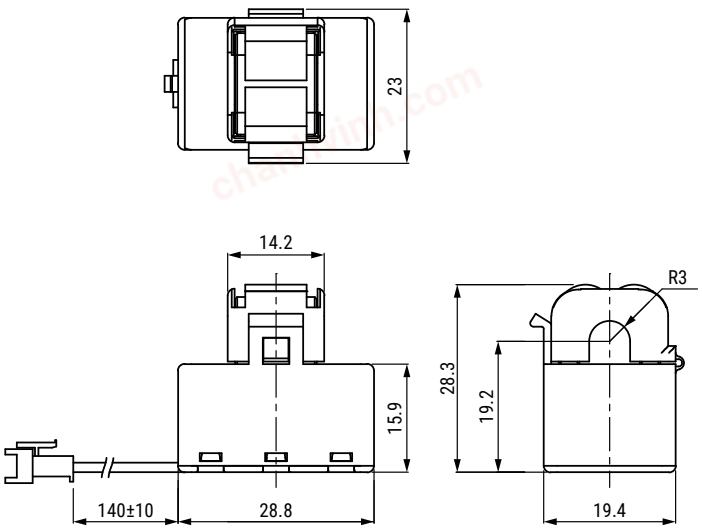

C/CT-1216

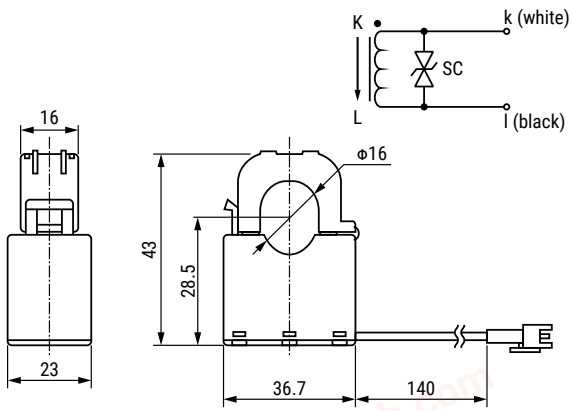

Connector SMR=02V-B (J.S.T)
(Mating Connector: SMP-02V-B)

Primary Current Direction

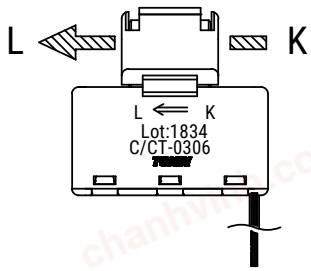

Secondary Current Direction

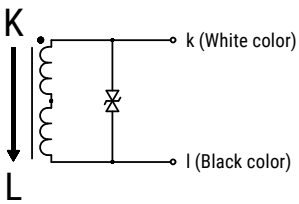

chanhvinh.com

AC Output Characteristics

C/CT-0306

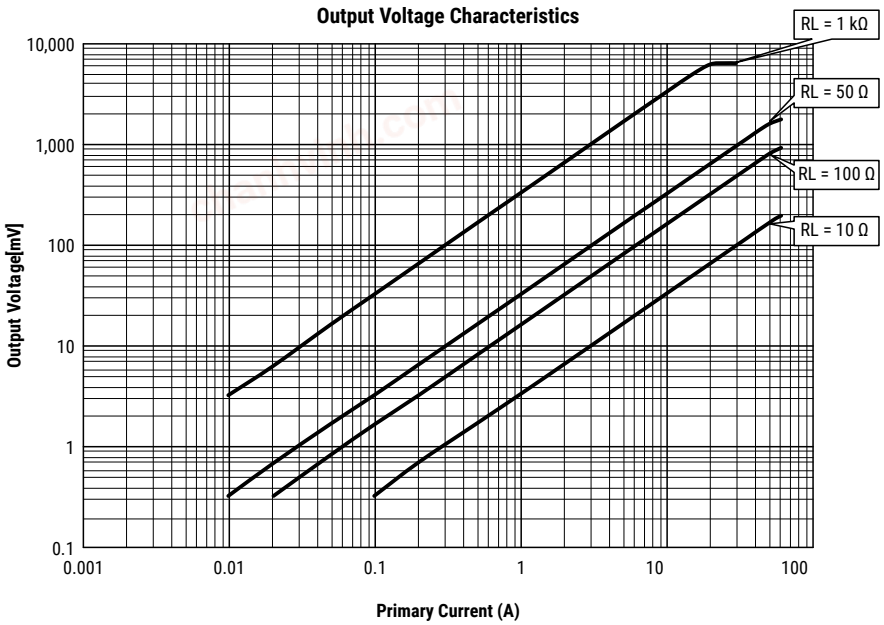

C/CT-1216

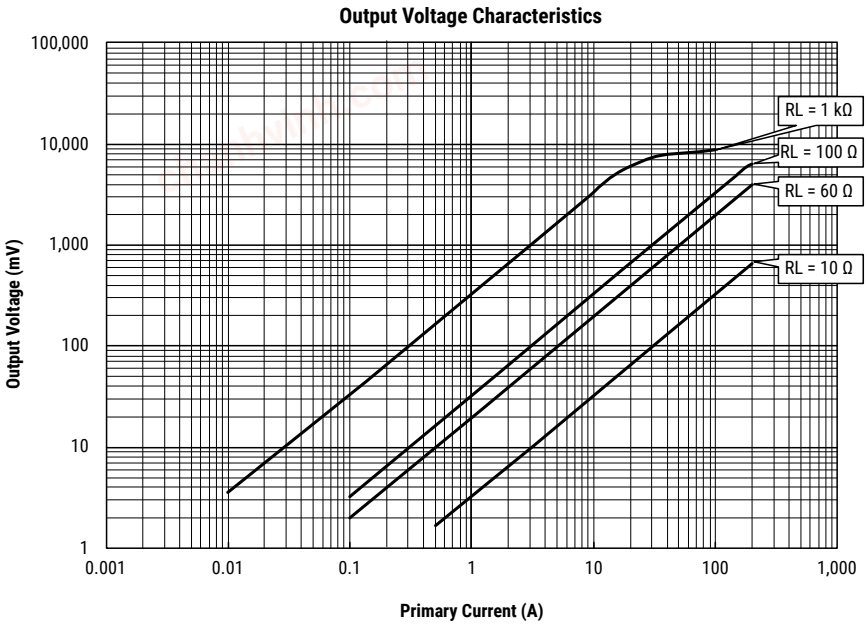

chanhvinh.com

Environmental Compliance

All C/CT sensors are RoHS compliant.

Specifications

Item	Performance Characteristics
Rated Current	30 – 120 A
Applicable Current	0.1 – 150.0 A
Output Voltage	100 ±2 mV for C/CT-0306 and 400 ±8 mV for C/CT-1216
Current Transformation Ratio	3,000
Output Protection	7.5 V
Insulation Resistance	100 MΩ at 500 VDC (between core and terminal)
Operating Temperature Range	–10°C to +60°C
Storage Temperature Range	–20°C to +75°C

Table 1 – Ratings & Part Number Reference

Part Number	Rated Current[1] (A)	Applicable Current[1] (A)	Output Voltage[2] (mV)	Current Transformation Ratio	Output Protection (V)	Insulation Resistance[3]	Weight (g)
C/CT-0306	30	0.1 – 50.0	100 ±2	3,000	7.5	100 MΩ	23.7
C/CT-1216	120	0.1 – 150.0	400 ±8	3,000	7.5	100 MΩ	63.3

[1] *50 Hz/60 Hz*

[2] *Measurement conditions from output voltage: f = 50 Hz, RL=10 Ω, Io = 30 A for C/CT-0306 and 120 A for C/CT-1216*

[3] *At 500 VDC, between core and terminal*

chanhvinh.com

Packaging

Part Number	Packaging Type	Pieces Per Box
C/CT-0306	Tray	144
C/CT-1216		108

Handling Precautions

Precautions for Product Storage
Current sensors should be stored in normal working environments. While the sensors are quite robust in other environments, exposure to high temperatures, high humidity, corrosive atmospheres, and long-term storage degrade solderability.

KEMET recommends that maximum storage temperature not exceed 75°C, and that atmospheres should be free of chlorine and sulfur-bearing compounds. Temperature fluctuations should be minimized to avoid condensation on the parts. Avoid storage near strong magnetic fields, as they can magnetize the product and cause its characteristics to change.

The stock of current sensors should be used within 24 months of receipt.

Before Using High Alternating Current Sensors, Snap-on Type
- Do NOT drop or apply any other mechanical stress, as such stresses may change performance characteristics.
- Conduct a preliminary study when heating by current conduction (required).
- Do NOT use the high alternating current sensors, snap-on type, opened between secondary output terminals. Heat build-up in the magnetic core may occur, resulting in damage to the parts by coil melting.
- Install at room temperature. Open/close operation at below 5°C may break hinge of the case.

chanhvinh.com

KEMET Electronics Corporation Sales Offices

For a complete list of our global sales offices, please visit www.kemet.com/sales.

Disclaimer

All product specifications, statements, information and data (collectively, the "Information") in this datasheet are subject to change. The customer is responsible for checking and verifying the extent to which the Information contained in this publication is applicable to an order at the time the order is placed. All Information given herein is believed to be accurate and reliable, but it is presented without guarantee, warranty, or responsibility of any kind, expressed or implied.

Statements of suitability for certain applications are based on KEMET Electronics Corporation's ("KEMET") knowledge of typical operating conditions for such applications, but are not intended to constitute – and KEMET specifically disclaims – any warranty concerning suitability for a specific customer application or use. The Information is intended for use only by customers who have the requisite experience and capability to determine the correct products for their application. Any technical advice inferred from this Information or otherwise provided by KEMET with reference to the use of KEMET's products is given gratis, and KEMET assumes no obligation or liability for the advice given or results obtained.

Although KEMET designs and manufactures its products to the most stringent quality and safety standards, given the current state of the art, isolated component failures may still occur. Accordingly, customer applications which require a high degree of reliability or safety should employ suitable designs or other safeguards (such as installation of protective circuitry or redundancies) in order to ensure that the failure of an electrical component does not result in a risk of personal injury or property damage.

Although all product–related warnings, cautions and notes must be observed, the customer should not assume that all safety measures are indicted or that other measures may not be required.

When providing KEMET products and technologies contained herein to other countries, the customer must abide by the procedures and provisions stipulated in all applicable export laws and regulations, including without limitation the International Traffic in Arms Regulations (ITAR), the US Export Administration Regulations (EAR) and the Japan Foreign Exchange and Foreign Trade Act.

KEMET is a registered trademark of KEMET Electronics Corporation.