chanhvinh.com

ALS40A221DE450

ALS40, Aluminum Electrolytic, 220 uF, 20%, 450 VDC, -40/+105°C, 12.8 mm

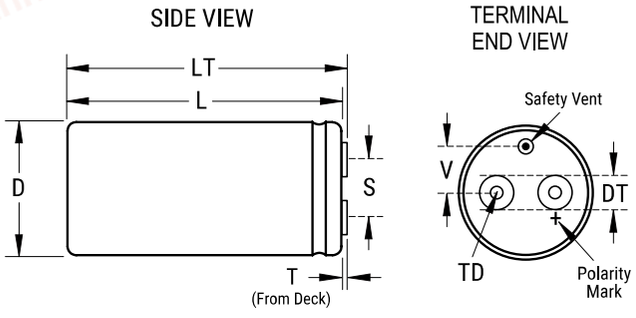

General Information	
Series	ALS40
Dielectric	Aluminum Electrolytic
Description	Screw Terminal, Aluminum Electrolytic
RoHS	Yes
Mounting	Through-Hole
Halogen Free	No
Typical Component Weight	115 g
Notes	Dimensions D And L Include Sleeving. MS (MxH) = M8x12. Mounting Clamp (Sold Separately): V3/H2/2736
Shelf Life	156 Weeks

Click here for the 3D model.

Dimensions	
D	36mm +/-1mm
L	82mm +/-2mm
T	7.1mm +/-0.5mm
S	12.8mm +/-0.5mm
DT	8mm +/-0.5mm
LT	87.5mm +/-1mm
TD	10mm MIN
V	8mm NOM

Packaging Specifications	
Sleeving	Yes
Packaging	Bulk, Box

Specifications	
Capacitance	220 uF
Tolerance	20%
Voltage DC	450 VDC, 495 VDC (Surge)
Temperature Range	-40/+105°C
Rated Temperature	105°C
Life	6000 Hrs (Rated Voltage And Ripple Current At 105C), 10000 Hrs (Rated Voltage At 105C)
ESR	487 mOhms (100Hz 20C), 242 mOhms (10kHz 20C)
Ripple Current	2.5 Amps (100Hz 105C), 6.2 Amps (10kHz 105C)
Leakage Current	297 uA (5min 20°C)

Statements of suitability for certain applications are based on our knowledge of typical operating conditions for such applications, but are not intended to constitute - and we specifically disclaim - any warranty concerning suitability for a specific customer application or use. This Information is intended for use only by customers who have the requisite experience and capability to determine the correct products for their application. Any technical advice inferred from this Information or otherwise provided by us with reference to the use of our products is given gratis, and we assume no obligation or liability for the advice given or results obtained.

© 2006 - 2026 YAGEO