chanhvinh.com

JUMO GmbH & Co. KG
Delivery address: Mackenrodtstraße 14,
36039 Fulda, Germany
Postal address: 36035 Fulda, Germany
Phone: +49 661 6003-0
Fax: +49 661 6003-607
e-mail: mail@jumo.net
Internet: www.jumo.net

JUMO Instrument Co. Ltd.
JUMO House
Temple Bank, Riverway
Harlow, Essex CM20 2DY, UK
Phone: +44 1279 635533
Fax: +44 1279 635262
e-mail: sales@jumo.co.uk
Internet: www.jumo.co.uk

JUMO Process Control, Inc.
8 Technology Boulevard
Canastota, NY 13032, USA
Phone: 315-697-JUMO
1-800-554-JUMO
Fax: 315-697-5867
e-mail: info@jumo.us
Internet: www.jumo.us

JUMO IMAGO 500 Multi-channel Process and Program Controller

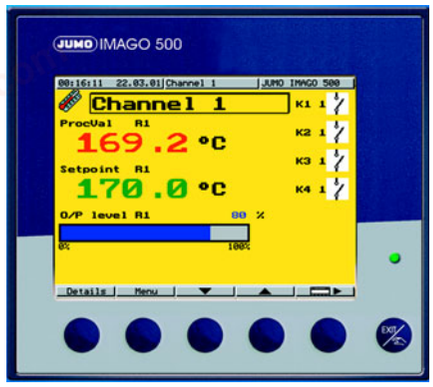

JUMO IMAGO 500
Type 703590/ ...

Brief description

The JUMO IMAGO 500 is a process and program controller with up to 8 controller channels or 4 program channels. The instrument is built to the format 144 mm x 130 mm for a standard 92 mm x 92 mm panel cut-out and a mounting depth of 170 mm.
The display is a 5" TFT screen (27 colors). The layout of the screen templates can be individually adapted and adjusted. Two freely configurable screen templates make it possible to customize the placing of texts, process values, background pictures and icons.
The controller features up to 8 analog inputs and 6 logic inputs, as well as six expansion slots for switched or analog outputs. Four of these slots can be used alternatively for analog inputs or outputs.
A setup program is available for conveniently configuring the instrument from a PC.
Linearizations for the usual transducers are stored within the controller, four customer-specific linearization tables can be programmed.
A math and logic module can be used to adapt the instrument to a very wide range of control tasks.
Two serial interfaces, RS422/485 or Profibus-DP, serve to integrate the controller into a data network.
Modules can be retrofitted quite simply by the user (see block structure).
The electrical connection is made at the rear of the instrument, via plug-in screw terminals.

Block structure

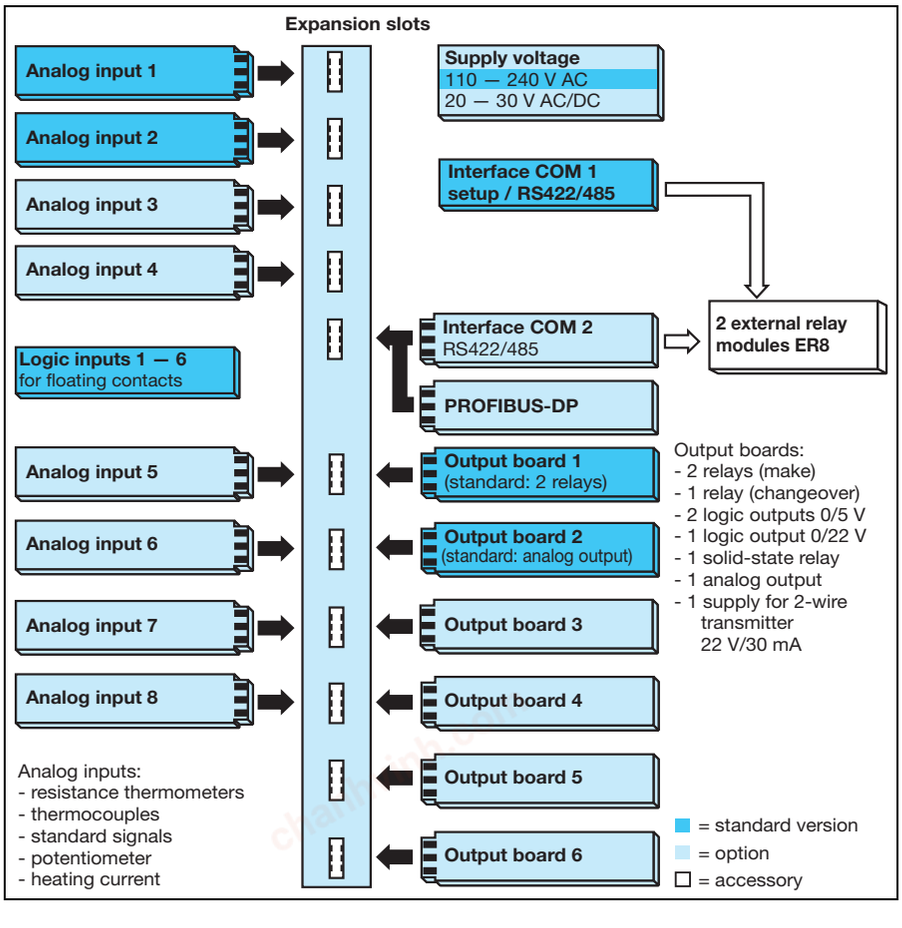

Key features

- Brilliant 5" TFT screen with 27 colors
- Freely configurable screen templates
- Up to 8 controller channels
- 50 programs, with 1000 segments under dynamic management
- 16 limit comparators
- Modular hardware design
- Recording function
- Up to 4 cascade controllers
- Profibus-DP interface
- Math and logic functions
- Teleservice via external modem
- Setup program and program editor for Windows 95/98/NT4.0/2000/ME/XP/ Vista

Approval/ approval marks

2010-06-21/00398477

chanhvinh.com

Displays and controls

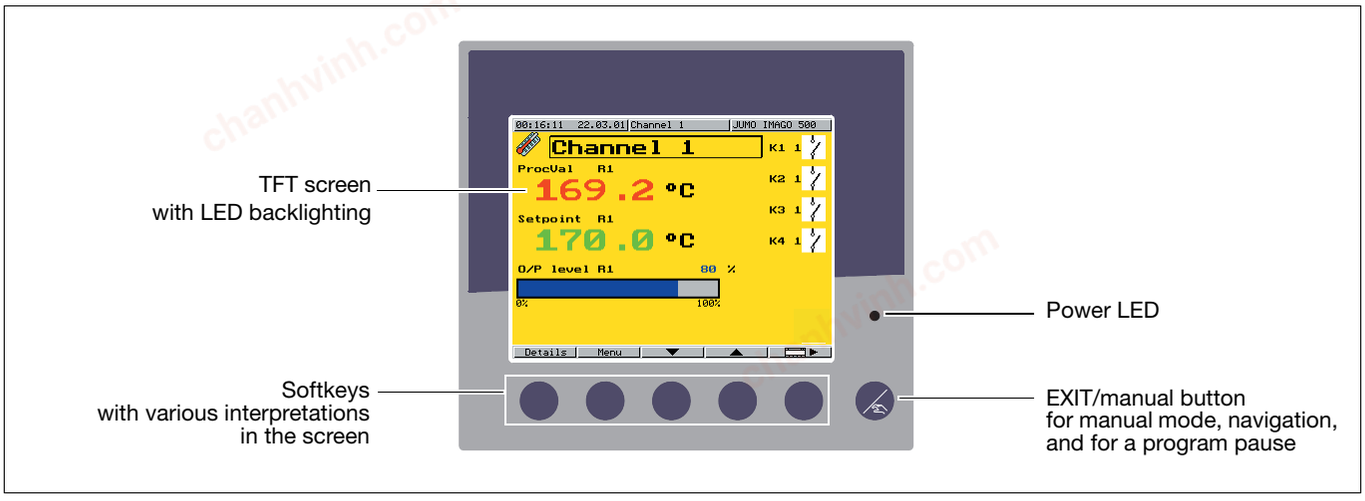

Operating concept

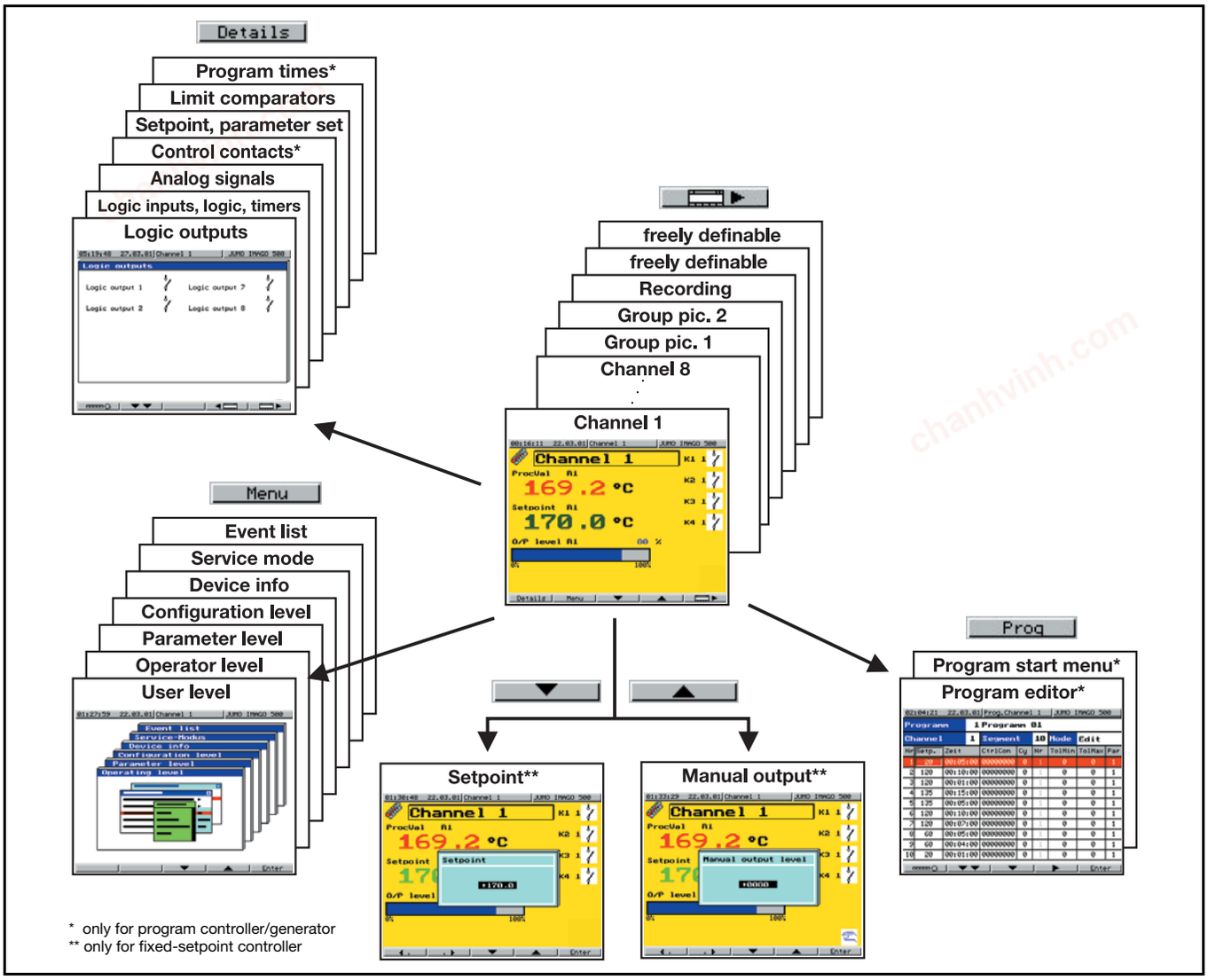

The operation, configuration and displays are organized into a structural arrangement in the screen templates. The insertion of the (variable) softkey functions in the lower section of the screen keeps the user continually informed about the operating options.
The instrument is configured through the well-established level structure (operating, parameter and configuration levels).
A customer-specific arrangement of those parameters that frequently have to be altered (user level) can also be implemented by using the setup program.
A wide variety of process values and status displays (e.g. switching states of the limit comparators) are visualized clearly and in detail.
Operating states and alarms are indicated by definable texts and icons in a reserved area of the screen.
Unused screen templates can be switched out of the display.

chanhvinh.com

Recording

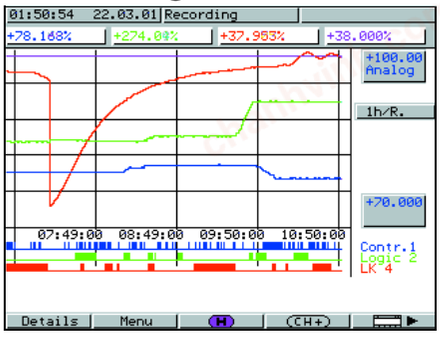

The recording function is used to create a graphical representation of the development of process values. This can be used to monitor and check control processes.
Features:
- free choice of signals for 4 analog channels and 3 logic channels
- memory storage cycle 60 — 3600 measurements per hour
- ring memory for 43,200 measurements
- readout of data via the interface

Self-optimization

Standard features include self-optimization, making it possible for the controller to be matched to the control loop by a user who is not a control-technology expert.
This functions by evaluating the response of the control loop to specific changes in the manipulating variable. Either an oscillatory method or a step response test can be selected. The controller parameters that are calculated are: proportional band, reset time, derivative time, filter time constant, and cycle time.

Ramp function

In a fixed-setpoint controller, the ramp function enables a defined run-up of the process value from t_0 until it reaches the given setpoint value.
The rate of change is defined as a gradient (°C/min, °C/hour or °C/day).
When the setpoint changes, this function is activated in the rising or falling direction.
The ramp function can be activated individually for each channel.

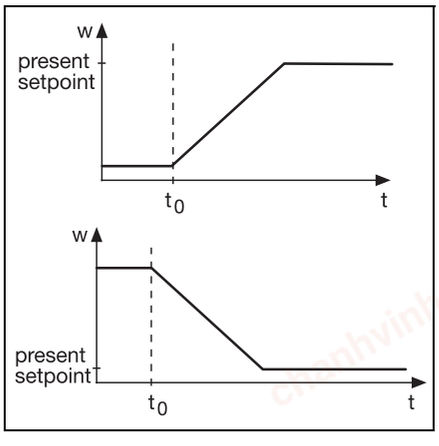

Customer-specific linearization

In addition to the linearizations for the usual transducers, up to four customer-specific linearizations can be created. The programming is carried out in the setup program, in the form of a table of values or a formula.

Configurable screen templates

Two freely configurable screen templates are available for arrangement into user-specific layouts.
Using the accessory setup program, representations of process values and graphics are selected from a library and assembled into the screen template within a graphics editor.
Some graphical elements can also be incorporated.

Configurable texts

The accessory setup program can be used to define up to 100 texts for use as messages and representations in the screen templates. Furthermore, all instrument texts can be changed or translated into other languages.

Event list

Important events, such as alarm messages, external texts or system messages, are collected together in an event list.

User level

Parameters which frequently have to be changed by the user can be collected together and displayed in the screen template “User level” (only through the setup program).

Math and logic module[1]

The math module makes it possible to combine values such as setpoints, output levels and measurements into a mathematical formula.
The logic module can be used to make a logical combination of such elements as logic inputs and limit comparator states.
Up to 16 math or logic formulae can be entered through the setup program, and the results of the calculations can be presented at the outputs or used for internal purposes.

Difference, ratio, and humidity control

Controllers for difference, ratio, and humidity can be achieved through standard formulae that have been included.

Cascade controller

Demanding control tasks can be handled by configuring the instrument as a cascade or trimmer cascade controller. Four cascade controllers can be implemented by using eight controller channels.

C-level controller (option)

The instrument can be used as a C-level controller, to regulate the level of carbon in the atmosphere of a gas coking furnace. The sensing device in this case is a zircon dioxide probe.

Logic functions

- Start/cancel of self-optimization
- Change to manual mode
- Inhibit manual mode
- Ramp stop/OFF
- Setpoint changeover
- Process value changeover
- Parameter set switching
- Key/level inhibit
- Text display
- Screen saving
- Screen switching
- Acknowledge limit comparators
- Program start/stop/cancel
- Inhibit program start
- Program selection
- Fast forwards
- Segment change
- Time synchronization
- Timer start/stop

The logic functions can be combined with one another.

Functions of the Outputs

- Analog input variables
- Math
- Process value
- Setpoint
- Ramp end value
- Control deviation
- Output level
- Cascade output level
- Program end value
- Controller outputs
- Limit comparators
- Control contacts
- Logic inputs
- Logic
- Program end
- Ramp end
- Manual mode signal
- Timer signals
- Program/automatic signals

chanhvinh.com

Program controller

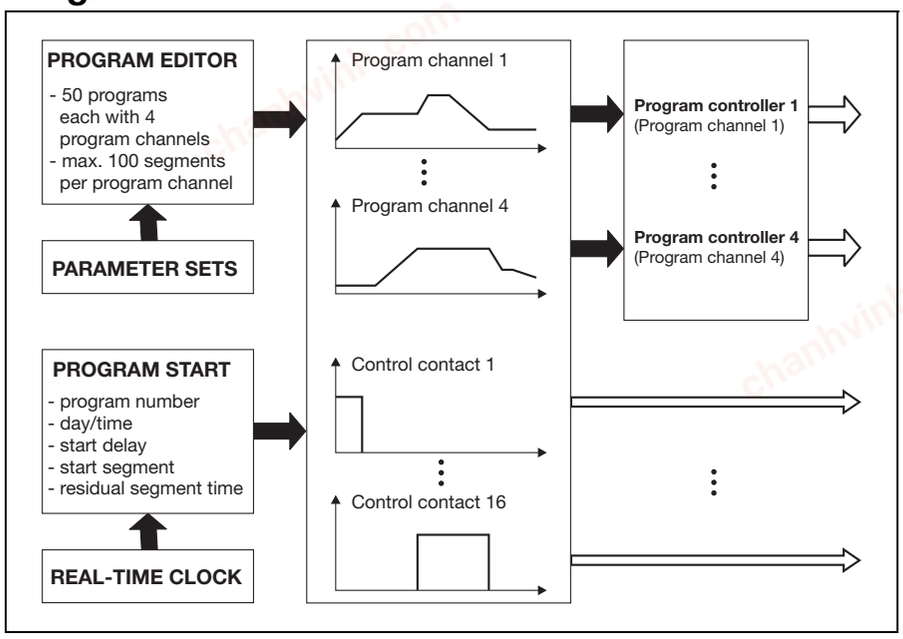

50 programs can be created, with a maximum of 4 program channels. The program channels run synchronously, and can each contain up to 100 segments. A total of 1000 segments can thus be programmed.
Furthermore, 16 control contacts can be programmed and assigned to the program channels. These are also run synchronously.
The start of a program can be initiated manually, by pressing a key on the instrument (or an external button), or through the programming of the start conditions. The start time can be determined either by defining a start delay or by programming a date and time. A weekly program can also be entered into the instrument, through the setup program.

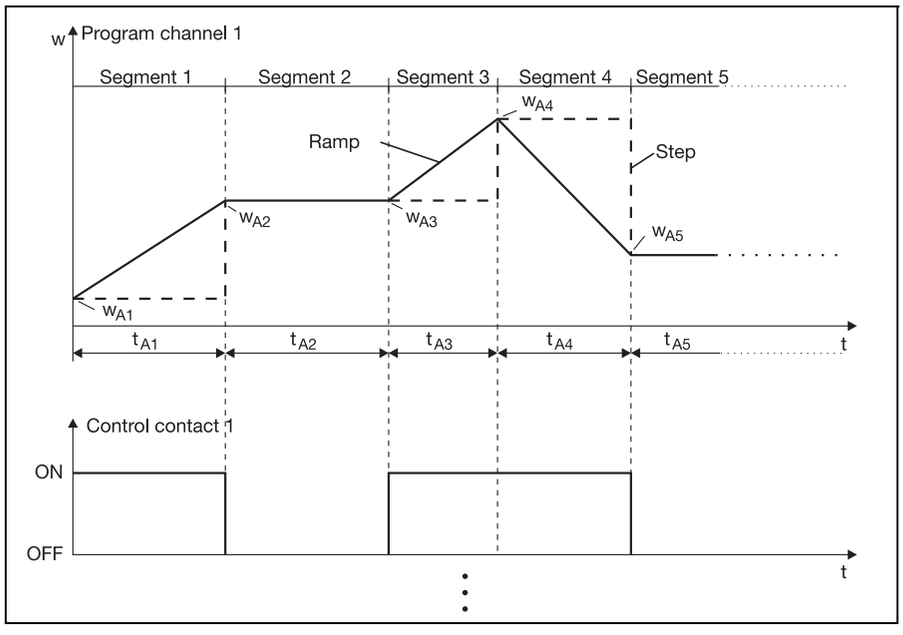

Program channels are made up from a sequence of segments containing defined segment setpoints. The individual segment setpoints can optionally be linked to ramp or step functions.
The state of the 16 control contacts can be influenced in each segment. In addition, one of two programmable parameter sets and an upper and lower limit (tolerance band) for monitoring the process value can be assigned to each segment.
Endless loops can be implemented by programming repeated cycles.
Segments are defined by the segment setpoint and the segment time.
The control contacts 9 — 16 can only be set in the program editor of the setup program.

Program editor

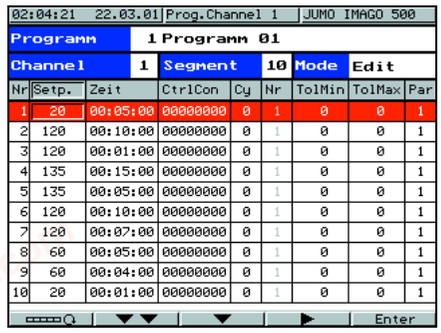

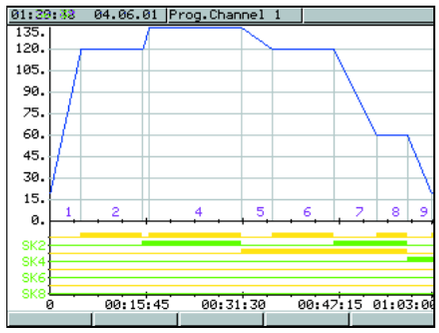

The integrated program editor can be used for the comfortable creation and alteration of programs.
The program profiles and the states of the control contacts can be graphically displayed as a function of the time.
The setup program can be used to program a second setpoint sequence per program channel.

Timers

Four timers are provided, for time-dependent control. The states of the timers can be used for further internal processing or to set logic outputs.

chanhvinh.com

Setup program (accessory)

The setup program for configuring the instrument is available in German, English and French. Using a PC, you can create and edit sets of data, and transfer them to the controller or read them out from the instrument. The data sets are stored and managed.

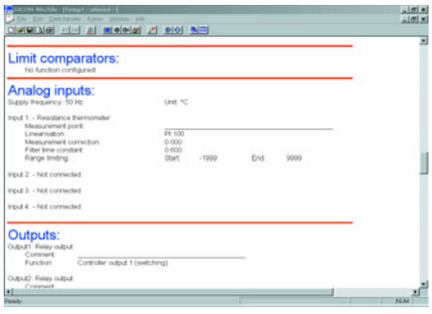

Commissioning software JUMO Startup

The commissioning software JUMO Startup is provided for optimum and comfortable adaptation of the controller to the control loop.
Various process variables (e.g setpoint, process value, control deviation, controller output signals) can be graphically visualized. The controller parameters can be altered and transferred to the controller via the setup or the RS422/485 interface on the controller.

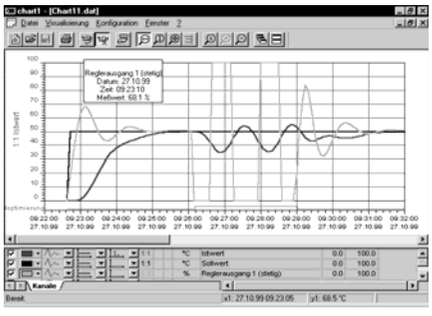

External relay module ER8 (accessory)

Up to 2 ER8 external relay modules can be used. Each module expands the controller by 8 relay or logic outputs.
They can be operated via an RS422/RS485 interface.
The setup program is required to configure ER8 modules, which are mounted on DIN rails.

Interfaces

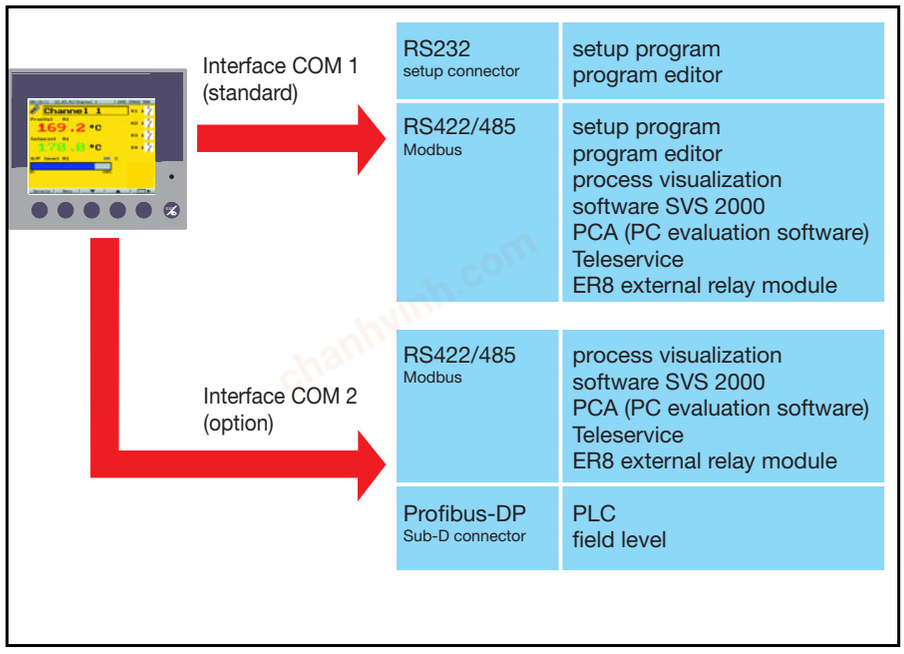

RS422/RS485 interface

The serial interface is used for communication with higher-level (supervisory) systems. The transmission protocol that is used is the Modbus protocol.

Profibus-DP[1]

The Profibus-DP interface can be used to integrate the controller into a fieldbus system operating according to the Profibus-DP standard. This Profibus version is especially designed for communication between automation systems and decentralized peripheral devices at the field level, and optimized for speed. The data transmission is made serially, using the RS485 standard.
GSD generator, the project-planning tool that is supplied with the package (GSD = Gerätestammdaten, i.e. basic device data), is used to make a selection of device characteristics for the controller to create a standardized GSD file that is used to integrate the controller into the fieldbus system.

[1] Option

chanhvinh.com

Parameter level

All the parameters and their meanings are included in the table. Some parameters may be omitted or meaningless for a particular type of controller. Two parameter sets can be stored, to handle special applications.

Parameter	Value range	Factory setting	Meaning
Controller structure	P, I, PD, PI, PID	PID	Control loop feedback
Proportional band	0 to 9999 digits	0 digits	Size of the proportional band 0 means that the controller structure is out of action!
Derivative time	0 to 9999 sec	80 sec	Determines the differential component of the controller output signal
Reset time	0 to 9999 sec	350 sec	Determines the integral component of the controller output signal.
Cycle time	0 to 9999 sec	20 sec	When using a switched output, the cycle time should be chosen so that the energy flow to the process is quasi-continuous, i.e. as continuous as is practicable without overloading the switching elements.
Contact spacing	0 to 999 sec	0 digits	The spacing between the two controller contacts for 3-state or modulating controllers, or continuous controllers with an integrated actuator driver.
Switching differential	0 to 999 digits	1 digit	Hysteresis for switching controllers with proportional band = 0
Actuator time	5 to 3000 sec	60 sec	The actually utilized stroke time of the regulator valve with modulating controllers or continuous controllers with an integrated actuator driver.
Working point	-100 to +100%	0%	The output level for P and PD controllers (if x = w then y = Y0).
Output level limiting	0 to 100%	100%	The maximum limit for the output level.
	-100 to +100 %	-100%	The minimum limit for the output level.
Minimum relay ON time	0 to 60 sec	0 sec	Limits the frequency of switching for switched outputs.

Electrical isolation

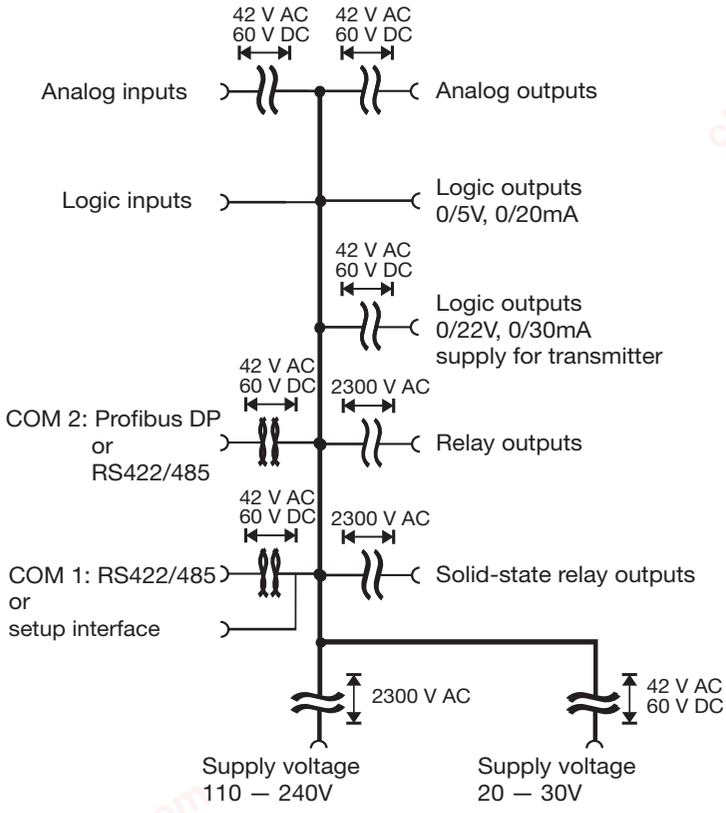

chanhvinh.com

Technical data

Thermocouple input

Designation		Measurement range	Meas. accuracy[1]	Ambient temperature error
Fe-Con L		-200 to +900°C	≤ 0.25%	100 ppm / °C
Fe-Con J	EN 60584	-200 to +1200°C	≤ 0.25%	100 ppm / °C
Fe-Con U		-200 to +600°C	≤ 0.25%	100 ppm / °C
Cu-Con T	EN 60584	-200 to +400°C	≤ 0.25%	100 ppm / °C
NiCr-Ni K	EN 60584	-200 to +1372°C	≤ 0.25%	100 ppm / °C
NiCr-Con E	EN 60584	-200 to +915°C	≤ 0.25%	100 ppm / °C
NiCrSi-NiSi N	EN 60584	-100 to +1300°C	≤ 0.25%	100 ppm / °C
Pt10Rh-Pt S	EN 60584	0 to 1768°C	≤ 0.25%	100 ppm / °C
Pt13Rh-Pt R	EN 60584	0 to 1768°C	≤ 0.25%	100 ppm / °C
Pt30Rh-Pt6Rh B	EN 60584	0 to 1820°C	≤ 0.25%[2]	100 ppm / °C
W5Re-W26Re C		0 to 2320 °C	≤ 0.25%	100 ppm / °C
W3Re-W25Re D		0 to 2495 °C	≤ 0.25%	100 ppm / °C
W3Re-W26Re		0 to 2400 °C	≤ 0.25%	100 ppm / °C
Cold junction		Pt100 internal, external, or constant		

[1] with 250msec sampling time
[2] within the range 300 to 1820°C

Input for resistance thermometer

Designation		Connection circuit	Measurement range	Meas. accuracy[1]	Ambient temperature error
Pt100	EN 60751	2-wire / 3-wire	-200 to +850°C	≤ 0.05%	50 ppm / °C
Pt50, Pt500, Pt1000	EN 60751	3-wire	-200 to +850°C	≤ 0.1%	50 ppm / °C
Cu50		3-wire	-50 to +200°C	≤ 0.1%	50 ppm / °C
Ni100	DIN 43760	2-wire / 3-wire	-60 to +250°C	≤ 0.05%	50 ppm / °C
KTY11-6		3-wire	-50 to +150°C	≤ 1.0%	50 ppm / °C
PtK9		3-wire	Lithium-chloride sensor		
Sensor lead resistance		max. 30Ω per lead for 2-wire or 3-wire circuit			
Meas. current		250µA			
Lead compensation		Not required for 3-wire circuit. With a 2-wire circuit, the lead resistance can be compensated in software by a correction of the process value.			

Input for standard signals

Designation	Measurement range	Meas. accuracy[1]	Ambient temperature error
Voltage	0 to 10V -10 to +10V -1 to +1V 0 to +1V 0 to 100mV -100 to +100mV Input resistance R_{IN} > 100 kΩ	≤ 0.2% ≤ 0.2% ≤ 0.1% ≤ 0.1% ≤ 0.1% ≤ 0.1%	100 ppm / °C 100 ppm / °C 100 ppm / °C 100 ppm / °C 100 ppm / °C 100 ppm / °C
C-level	0 to 2V Input resistance R_{IN} > 7.5 MΩ	≤0.1%	100 ppm / °C
Current	4 — 20mA, voltage drop ≤ 1 V 0 — 20mA, voltage drop ≤ 1 V	≤ 0.1% ≤ 0.1%	100 ppm / °C 100 ppm / °C
Heating current	0 — 50mA AC	≤ 1%	100 ppm / °C
Potentiometer	min. 100Ω, max. 4kΩ		

[1] with 250msec sampling time

Logic inputs

Floating contacts	

Standard version

chanhvinh.com

Measurement circuit monitoring

In the event of a fault, the outputs move to a defined (configurable) status.

Sensor	Overrange / underrange	Probe or lead short-circuit	Probe or lead break
Thermocouple	•	-	•
Resistance thermometer	•	•	•
Voltage 2 — 10V	•	•	•
0 — 10V	•	-	-
Current 4 — 20mA	•	•	•
0 — 20mA	•	-	-

• = recognized - = not recognized

Outputs

Relay contact rating contact life	changeover contact, or 2 x make 3A at 250V AC resistive load 150,000 operations at rated load (with 2 x make, the supply circuits ≥48V AC cannot be combined on one board with SELV circuitry!)		
Logic current limiting	0/5V 20mA	or	0/22V 30mA
Solid-state relay contact rating protection circuitry	1A at 230V varistor		
Voltage output signals load resistance	0 — 10V / 2 — 10V R_{load} ≥ 500Ω		
Current output signals load resistance	0 — 20mA / 4 — 20mA R_{load} ≤450Ω		
Supply voltage for 2-wire transmitter voltage current	22V 30mA		

Controller

Controller type	2-state controller,
	3-state controller, modulating controller, continuous controller, continuous controller with integrated actuator driver
Controller structures	P / PD / PI / PID / I
A/D converter	dynamic resolution up to 16 bit
Sampling time	250 msec
	50 msec, 150 msec, 250 msec (configurable)

Color screen

Resolution	320 x 240 pixels
Size (screen diagonal)	5" (12.7cm)
Type	TFT screen with LED backlighting
No. of colors	27 colors

Electrical data

Supply voltage (switchmode PSU)	110 — 240V AC +10/-15%, 48 — 63Hz
	20 — 30V AC/DC, 48 — 63Hz
Electrical safety	to EN 61010-1 overvoltage category III, pollution degree 2
Power consumption	max. 30 VA
Data backup	Flash memory
Data buffer	battery (for restart data / initial conditions for the program controller / time)
Electrical connection	at rear, via plug-in screw terminals conductor cross-section max. 2.5mm^2 with core ferrules (length: 10mm)
Electromagnetic compatibility interference emission interference immunity	EN 61326-1 Class A - only for industrial use - to industrial requirements

Standard version

chanhvinh.com

Housing

Housing type	housing and back panel: metal for mounting in control panels/switchgear cabinets to IEC 61554
Front bezel	plastic to UL94 V0 144 mm x 130 mm
Mounting depth	170 mm
Panel cut-out	$92^{+0.8}$ x $92^{+0.8}$ mm
Ambient/storage temperature range	-5 to 50 °C / -40 to +70 °C
Climatic conditions	rel. humidity ≤ 75 % annual mean, no condensation
Operating position	horizontal
Enclosure protection	to EN 60529 front IP65 / rear IP20
Weight (fully fitted)	approx. 1400 g
Membrane keypad	polyester film, resistant to normal washing and cleaning agents

Interface (COM1)

Interface type	PC interface or RS422/485
Protocol	Modbus
Baud rate	9600, 19200, 38400
Device address	1 — 255
Minimum response time	0 — 500 msec

Interface (COM2)

Modbus

Interface type	RS 422/485
Protocol	Modbus
Baud rate	9600, 19200, 38400
Device address	1 — 254
Minimum response time	0 — 500 msec

Profibus

Device address	1 — 128

Approvals/marks of conformity

Mark of conformity	Testing laboratory	Certificates / certification numbers	Test basis	valid for
c UL us	Underwriters Laboratories	E 201387	UL 61010C-1 UL 50 - Type 1 CAN/CSA-C22.2 No. 1010-1-92	703590/...

chanhvinh.com

Connection diagram

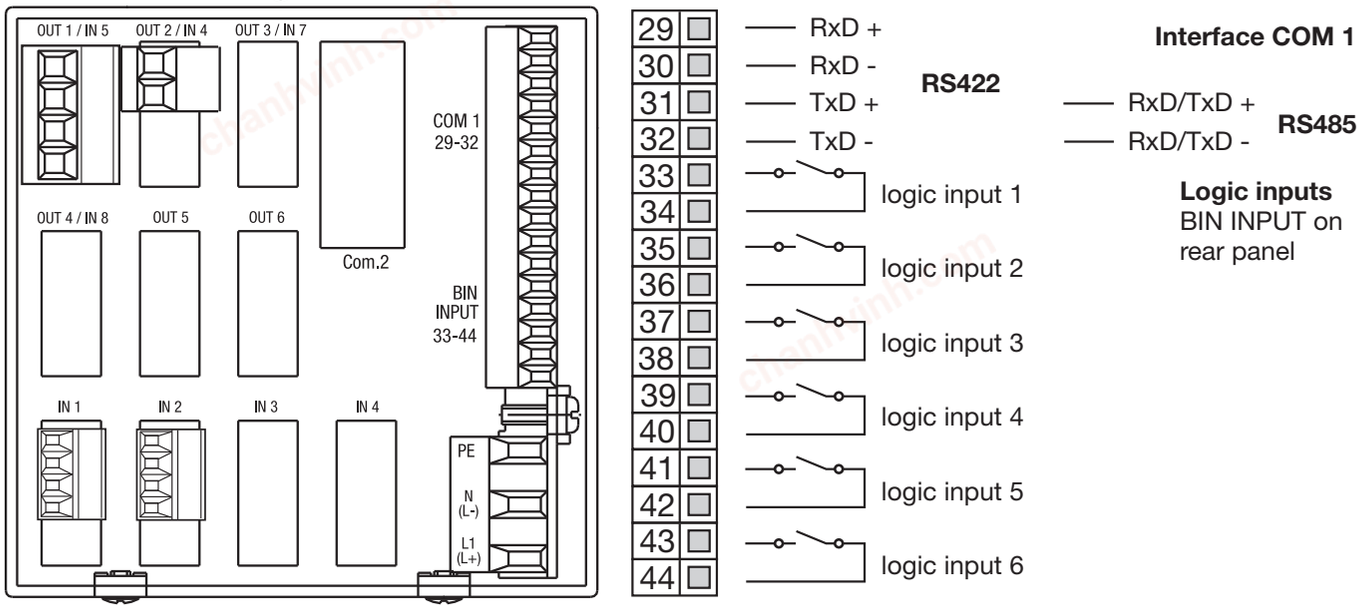

Analog inputs

Expansion slots: IN1 — 8

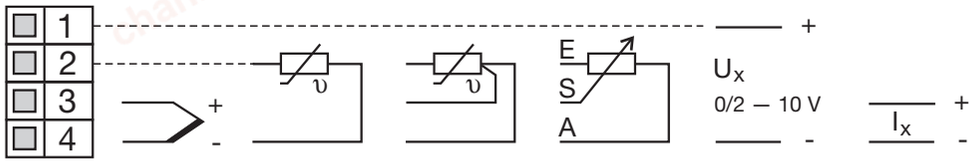

Outputs

Expansion slots: OUT1 — 6

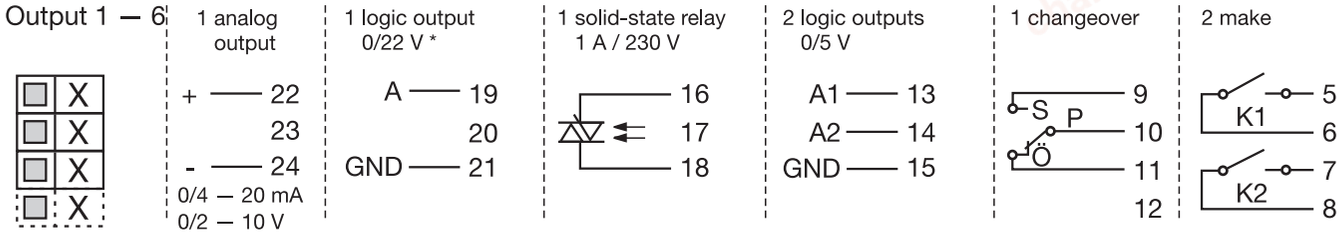

* or supply for 2-wire transmitter

Supply voltage

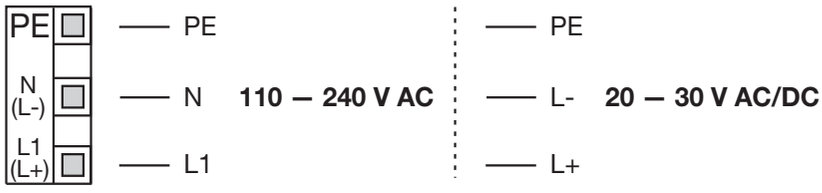

Slot	Expansion card with 1 output	Expansion card with 2 outputs
OUT1	Output 1	Output 1+7
OUT2	Output 2	Output 2+8
OUT3	Output 3	Output 3+9
OUT4	Output 4	Output 4+10
OUT5	Output 5	Output 5+11
OUT6	Output 6	Output 6+12

Interfaces

COM 2

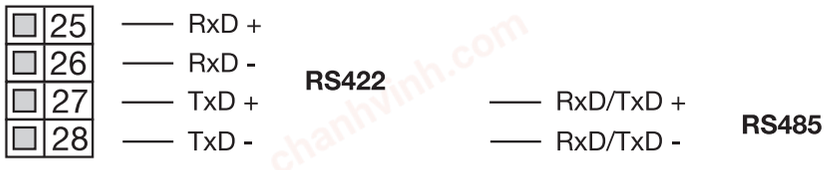

COM 2
Profibus-DP

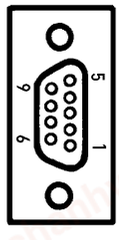

Pin	Assignment
3	RxD/TxD-P
4	RTS
5	DGND
6	VP
8	RxD/TxD-N

chanhvinh.com

Dimensions

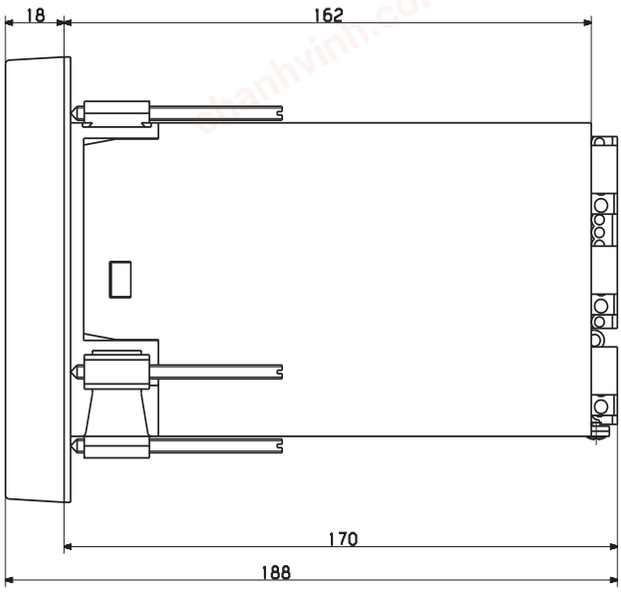

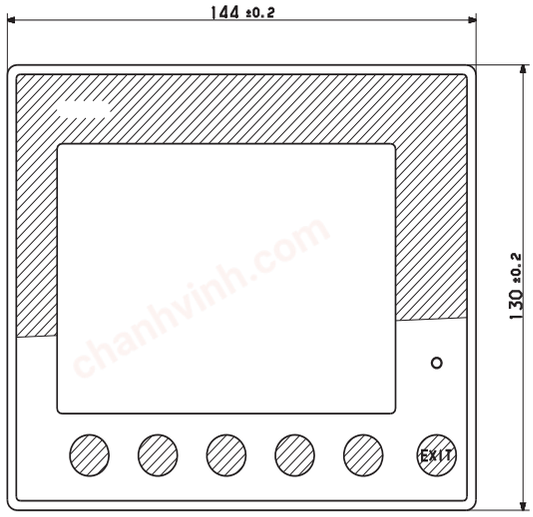

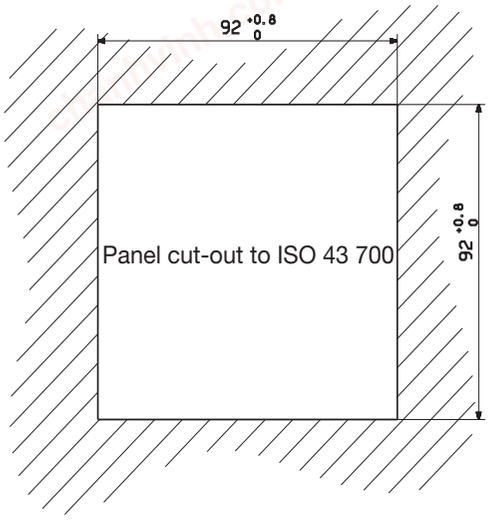

Rear view

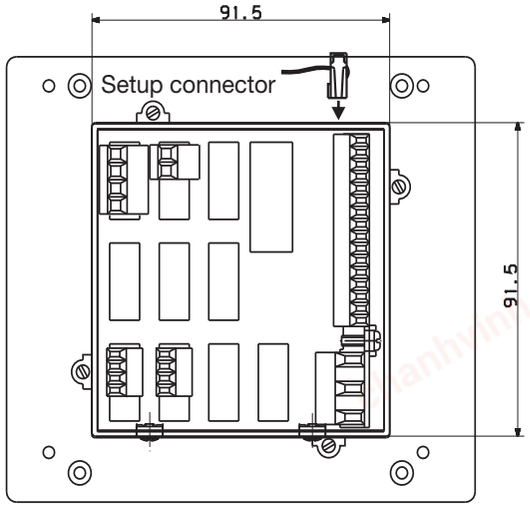

Accessories

External relay module ER8[1], 110 — 240V AC Sales No. 70/00405292 (relay outputs) Sales No. 70/00439131 (logic outputs)
External relay module ER8[1], 20 — 53V AC/DC Sales No. 70/00405297 (relay outputs) Sales No. 70/00471459 (relay outputs)
PC interface for setup program Sales No. 70/00301315 (TTL/RS232) Sales No. 70/00456352 (USB/TTL)
Setup program and program editor[2] Sales No. 70/00399795
Setup program with program editor and Startup[2] Sales No. 70/00403094
Setup program with program editor, Startup and Teleservice[2] Sales No. 70/00400012
Program editor (software)[2] Sales No. 70/00400460

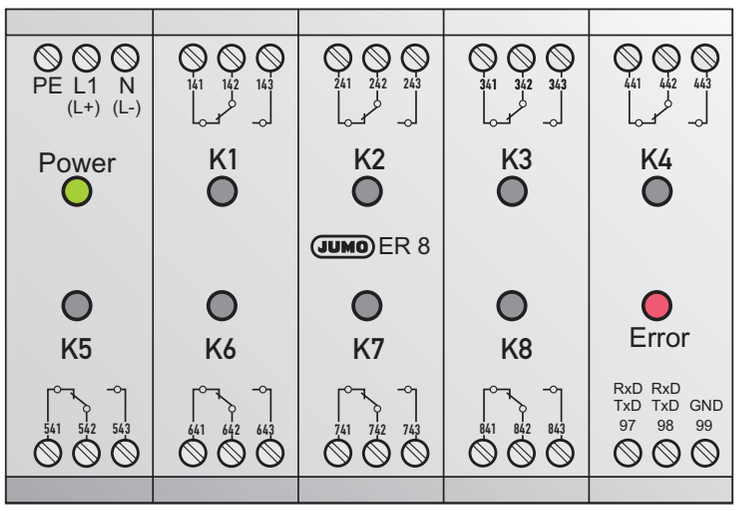

1 If the two external relay modules are used, an RS422/485 interface is required!

2 Requirements: Windows® 95/98/NT4.0/ME/2000/XP/Vista, PC Pentium100, 16 MByte RAM, 15 MByte free on HD, CD-ROM, 1 free serial interface

chanhvinh.com

Order details

	Basic type
703590	JUMO IMAGO 500; multi-channel process and program controller

			Basic type extensions
			No. of controller channels
2			2 controller channels
4			4 controller channels
8			8 controller channels
			Version
	8		standard, with factory settings
	9		customized programming, as specified
			Language for instrument texts
		1	German
		2	English
		3	French
		9	Customer-specifc language (Czech, Dutch, Finnish, Hungarian, Italian, Polish, Russian, Spanish, Swedish)

1	2	3	4	Analog inputs
0	0	0	0	not used
8	8	8	8	universal input (configurable)
3	3	3	3	input for zirconium dioxide sensor 0 — 2V

1	2	3	4	5	6	Outputs and analog inputs
0	0	0	0	0	0	none
1	1	1	1	1	1	1 relay (changeover)
2	2	2	2	2	2	1 solid-state relay 1A / 230 V
3	3	3	3	3	3	2 relays (make contacts)
4	4	4	4	4	4	1 logic output 0/22 V
5	5	5	5	5	5	1 analog output
6	6	6	6	6	6	1 supply for 2-wire transmitter 22V/30mA
7	7	7	7	7	7	2 logic outputs 0/5 V
8	8	8	8	-	-	1 universal input

		Supply voltage
2	3	110 — 240V AC +10/-15%, 48 — 63Hz
2	5	20 — 30V AC/DC 48 — 63Hz

		Interface COM2
0	0	not used
5	4	RS422/485 with Modbus/Jbus protocol
6	4	Profibus-DP

			Extra codes
0	0	0	no extra codes
2	1	2	C-level control
2	1	3	recording function
2	1	4	math and logic module 1 — 8
2	1	5	math and logic module 9 — 16 (requires extra code 214)

703590/ [ ][ ][ ] – [ ][ ][ ][ ] – [ ][ ][ ][ ][ ][ ] – [ ][ ] – [ ][ ] / [ ][ ][ ] , ...[1]

Standard version

[1] List extra codes in sequence, separated by commas.