chanhvinh.com

JUMO GmbH & Co. KG
Delivery address: Mackenrodtstraße 14
36039 Fulda, Germany
Postal address: 36035 Fulda, Germany
Phone: +49 661 6003-0
Fax: +49 661 6003-607
Email: mail@jumo.net
Internet: www.jumo.net

JUMO Instrument Co. Ltd.
JUMO House
Temple Bank, Riverway
Harlow, Essex, CM20 2DY, UK
Phone: +44 1279 63 55 33
Fax: +44 1279 62 50 29
Email: sales@jumo.co.uk
Internet: www.jumo.co.uk

JUMO Process Control, Inc.
6724 Joy Road
East Syracuse, NY 13057, USA
Phone: +1 315 437 5866
Fax: +1 315 437 5860
Email: info.us@jumo.net
Internet: www.jumousa.com

Flow-through fittings

Brief description

Flow-through fittings are used for holding electrochemical sensors (e.g. pH and redox combination electrodes, glass conductivity cells, compensation thermometers etc.) with a Pg13.5 screw-in thread and 120 mm mounting length. Fitting types for 1 to 3 sensors are available.

The fittings are mounted directly in the liquid flow lines, or in a bypass pipe. They protect the built-in sensors against breakage and, because of their special style, enable the correct flow that is required to avoid measurement errors.

A variety of mounting options and materials are available, but different versions and materials can also be supplied on request.

When planning the pipelines, the following points have to be taken into account:

- The fittings must be readily accessible so that the sensors, or the fitting itself, can be easily serviced or cleaned at regular intervals.
- Bypass measurements should be given preference; stopcocks should be provided to enable the removal of the sensor.
- Since pH and redox electrodes must not remain dry for a prolonged period during down-times, constructional provision has to be made to ensure that there is residual liquid in the fitting.
- For systems with raised pressure and temperature levels, the appropriate versions of the fittings and the sensors that are used must be selected.
- The suitability of the materials (e.g. their chemical compatibility) has to be checked by the system designer.
- a suitable mounting bracket for the type 202810/03 ... is not part of the scope of supply and must be ordered separately (see “Accessories and spare parts” on page 4).0



Type 202810/03-104-87-80/000



Type 202810/01-970-86

Additional fittings in our range

Type of fitting	Data Sheet
Flow-through fittings	202810
Immersion fittings	202820
Quick-change fittings	202822
Process fittings	202825

chanhvinh.com

JUMO GmbH & Co. KG
Delivery address: Mackenrodtstraße 14
36039 Fulda, Germany
Postal address: 36035 Fulda, Germany
Phone: +49 661 6003-0
Fax: +49 661 6003-607
Email: mail@jumo.net
Internet: www.jumo.net

JUMO Instrument Co. Ltd.
JUMO House
Temple Bank, Riverway
Harlow, Essex, CM20 2DY, UK
Phone: +44 1279 63 55 33
Fax: +44 1279 62 50 29
Email: sales@jumo.co.uk
Internet: www.jumo.co.uk

JUMO Process Control, Inc.
6724 Joy Road
East Syracuse, NY 13057, USA
Phone: +1 315 437 5866
Fax: +1 315 437 5860
Email: info.us@jumo.net
Internet: www.jumousa.com

Type 202810/03-...

Suitable for mounting 1 to 3 sensors with a Pg13.5 thread and 120 mm mounting length.

The “earthing rod” option enables the grounding of undesirable electric and electrostatic potentials, such as can occur in complex systems and would lead to measurement errors.

The version with the sample vessel in PP is used in cases where the transparent material polycarbonate (PC) (standard) is unsuitable, such as for processes with strong (sudden) temperature fluctuations, for example.



Type 202810/03-104-87-80/000

Technical data

Materials	
Housing	Polypropylene (PP)
Sample vessel	Polycarbonate (PC) or polypropylene (PP)
Seals	FPM
Permissible temperature	0 to 90 °C Please also note the maximum operating data for the sensor used.
Safe pressure	1 bar at 90 °C, 6 bar at 25 °C
Electrode holder	Pg13.5 thread for 1 to 3 sensors (blind grommets are included)
Connection	1/2" pipe A
Protection	IP65, EN 60529
Weight	Approx. 400 g

chanhvinh.com

JUMO GmbH & Co. KG
Delivery address: Mackenrodtstraße 14
36039 Fulda, Germany
Postal address: 36035 Fulda, Germany
Phone: +49 661 6003-0
Fax: +49 661 6003-607
Email: mail@jumo.net
Internet: www.jumo.net

JUMO Instrument Co. Ltd.
JUMO House
Temple Bank, Riverway
Harlow, Essex, CM20 2DY, UK
Phone: +44 1279 63 55 33
Fax: +44 1279 62 50 29
Email: sales@jumo.co.uk
Internet: www.jumo.co.uk

JUMO Process Control, Inc.
6724 Joy Road
East Syracuse, NY 13057, USA
Phone: +1 315 437 5866
Fax: +1 315 437 5860
Email: info.us@jumo.net
Internet: www.jumousa.com

Dimensions

Flow-throug fitting,
type 202810/03-104-87-80/000

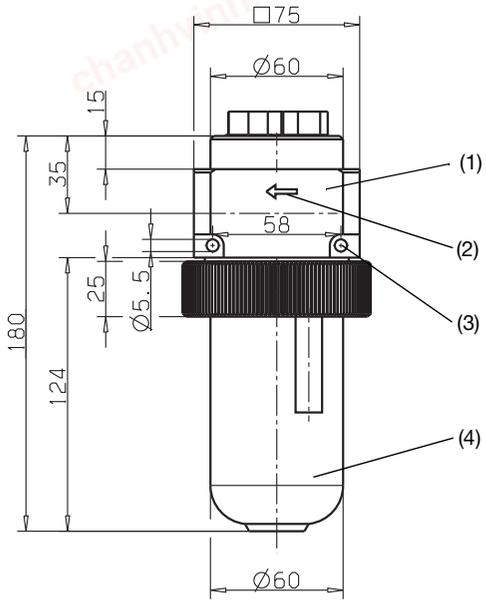

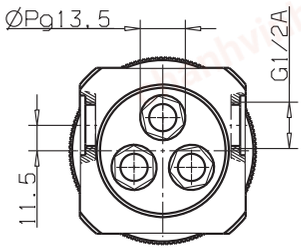

Mounting angle, stainless steel 1.4571, for type 202810/03...
part no. 00455706

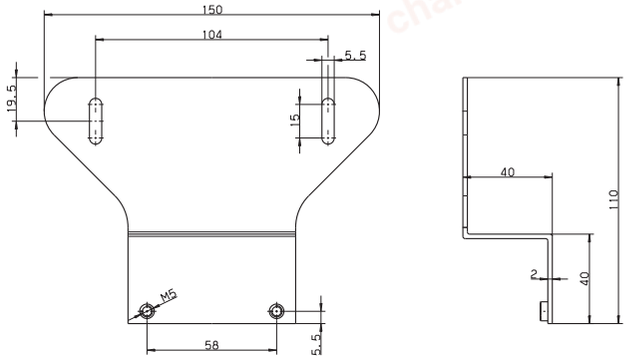

Flow-through fitting, fixed on mounting angle

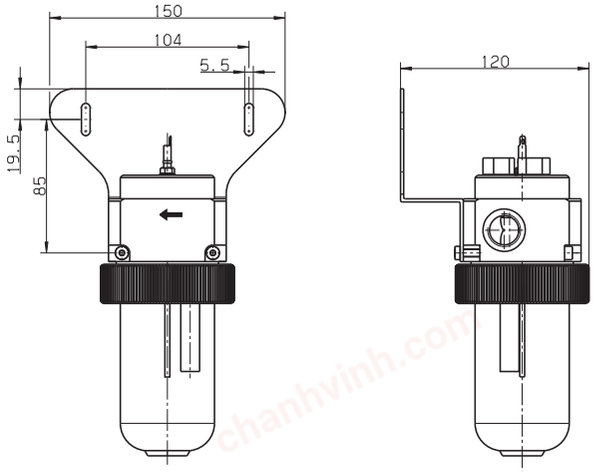

(1) Housing
(2) Flow direction
(3) Mounting hole
(4) Sample vessel

chanhvinh.com

JUMO GmbH & Co. KG
Delivery address: Mackenrodtstraße 14
36039 Fulda, Germany
Postal address: 36035 Fulda, Germany
Phone: +49 661 6003-0
Fax: +49 661 6003-607
Email: mail@jumo.net
Internet: www.jumo.net

JUMO Instrument Co. Ltd.
JUMO House
Temple Bank, Riverway
Harlow, Essex, CM20 2DY, UK
Phone: +44 1279 63 55 33
Fax: +44 1279 62 50 29
Email: sales@jumo.co.uk
Internet: www.jumo.co.uk

JUMO Process Control, Inc.
6724 Joy Road
East Syracuse, NY 13057, USA
Phone: +1 315 437 5866
Fax: +1 315 437 5860
Email: info.us@jumo.net
Internet: www.jumousa.com

Order details

	(1)	**Basic type**
202810		Flow-through fitting
	(2)	**Basic type extension**
03		for up to 3 sensors
	(3)	**Process connection**
104		Connection 1/2" pipe
	(4)	**Material of body**
87		Polypropylene (PP)
	(5)	**Material of sample vessel**
80		Polycarbonate (PC)
87		Polypropylene (PP)
	(6)	**Extra codes**
000		no extra code
055		Earthing rod

	(1)		(2)		(3)		(4)		(5)		(6)
Order code		/		-		-		-		/	
Order example	202810	/	03	-	104	-	87	-	80	/	000

Stock versions

(delivery: 3 working days after receipt of order)

Type	Designation	Part no.
202810/03-104-87-80/000	2DA-G1/2-PP, sample vessel "transparent", material polycarbonate (PC)	00327603
202810/03-104-87-87/000	2DA-G1/2-PP/PP, sample vessel "not transparent", material polypropylene (PP)	00351404

Production versions

(delivery: 10 working days after receipt of order)

Type	Designation	Part no.
202810/03-104-87-80/055	2DA-G1/2-PP, sample vessel "transparent", material polycarbonate (PC)	00362345
202810/03-104-87-87/055	2DA-G1/2-PP/PP, sample vessel "not transparent", material polypropylene (PP)	00378117

Accessories and spare parts

(delivery: 3 working days after receipt of order)

Type	Part no.
Replacement vessel; polycarbonate (PC); including O ring; for type 202810/03, version **since** september 2005	00417498
Replacement vessel; polypropylene (PP); including O ring; for type 202810/03, version **since** september 2005	00463367
KCl reservoir for wall mounting, pressure-tight up to 6 bar, to set up an electrolyte bridge, or when using electrodes filled with KCl	00060254
Mounting angle, stainless steel 1.4571, for type 202810/03...	00455706

Note:
The type code is a type designation, not a modular system.
If at all possible, please choose the items listed under “Stock items” or “Production items” when ordering.
Any free combination of individual code features must be technically checked by us and released.
Please ask us in case of doubt.

chanhvinh.com

JUMO GmbH & Co. KG
Delivery address: Mackenrodtstraße 14
36039 Fulda, Germany
Postal address: 36035 Fulda, Germany
Phone: +49 661 6003-0
Fax: +49 661 6003-607
Email: mail@jumo.net
Internet: www.jumo.net

JUMO Instrument Co. Ltd.
JUMO House
Temple Bank, Riverway
Harlow, Essex, CM20 2DY, UK
Phone: +44 1279 63 55 33
Fax: +44 1279 62 50 29
Email: sales@jumo.co.uk
Internet: www.jumo.co.uk

JUMO Process Control, Inc.
6724 Joy Road
East Syracuse, NY 13057, USA
Phone: +1 315 437 5866
Fax: +1 315 437 5860
Email: info.us@jumo.net
Internet: www.jumousa.com

Type 202810/01 in PVC

Suitable for mounting one sensor with a Pg 13.5 thread and a mounting length of 120 mm.



Type 202810/01-970-86



Type 202810/01-968-86

Technical Data

Materials	
Flow-through body	PVC
Electrode holder	PVC
Permissible temperature of liquid	0 to 60°C
Electrode holder	Pg13.5 for 1 sensor
Process connection	Solvent-weld sockets
Protection	IP65, EN 60529
Weight	Approx. 340 g

chanhvinh.com

JUMO GmbH & Co. KG
Delivery address: Mackenrodtstraße 14
36039 Fulda, Germany
Postal address: 36035 Fulda, Germany
Phone: +49 661 6003-0
Fax: +49 661 6003-607
Email: mail@jumo.net
Internet: www.jumo.net

JUMO Instrument Co. Ltd.
JUMO House
Temple Bank, Riverway
Harlow, Essex, CM20 2DY, UK
Phone: +44 1279 63 55 33
Fax: +44 1279 62 50 29
Email: sales@jumo.co.uk
Internet: www.jumo.co.uk

JUMO Process Control, Inc.
6724 Joy Road
East Syracuse, NY 13057, USA
Phone: +1 315 437 5866
Fax: +1 315 437 5860
Email: info.us@jumo.net
Internet: www.jumousa.com

Dimensions

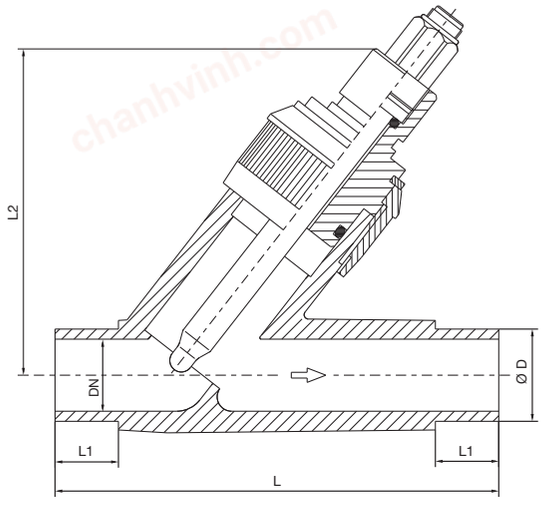

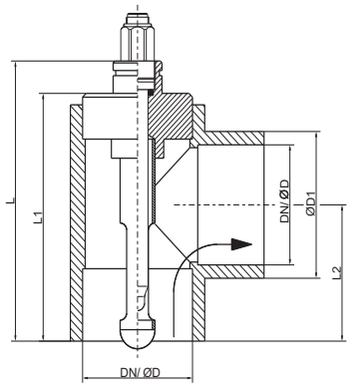

Vertical mounting position

Angled seat version

Type	DN	Ø D	L	L_1	L_2
202810/01-965-86	20	25	144	19	110
202810/01-966-86	25	32	154	22	115

T-piece version

Type	DN	Ø D	Ø D_1	L	L_1	L_2
202810/01-967-86	32	40	51	129	112	47
202810/01-968-86	40	50	62	137	120	59
202810/01-969-86	50	63	77	147	130	72

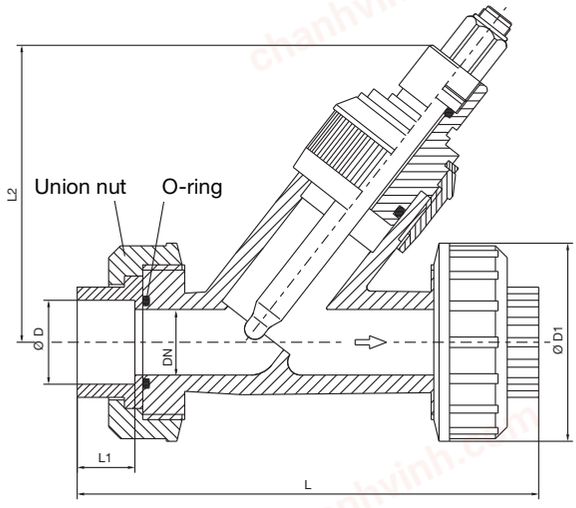

Angled seat version and with screwed butt joint

Type	DN	Ø D	Ø D_1	L	L_1	L_2
202810/01-970-86	20	25	66	158	19	110
202810/01-971-86	25	32	75	176	22	115

Permitted pressure

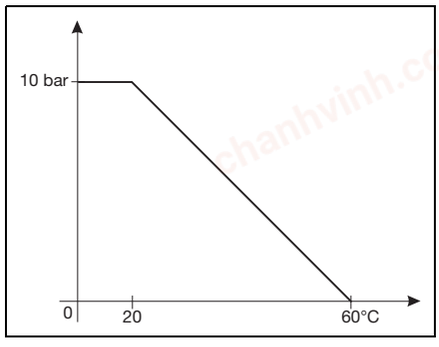

chanhvinh.com

JUMO GmbH & Co. KG
Delivery address: Mackenrodtstraße 14
36039 Fulda, Germany
Postal address: 36035 Fulda, Germany
Phone: +49 661 6003-0
Fax: +49 661 6003-607
Email: mail@jumo.net
Internet: www.jumo.net

JUMO Instrument Co. Ltd.
JUMO House
Temple Bank, Riverway
Harlow, Essex, CM20 2DY, UK
Phone: +44 1279 63 55 33
Fax: +44 1279 62 50 29
Email: sales@jumo.co.uk
Internet: www.jumo.co.uk

JUMO Process Control, Inc.
6724 Joy Road
East Syracuse, NY 13057, USA
Phone: +1 315 437 5866
Fax: +1 315 437 5860
Email: info.us@jumo.net
Internet: www.jumousa.com

Order details

	(1)	**Basic type**
202810		Flow-through fitting
	(2)	**Basic type extension**
01		for 1 sensor
	(3)	**Process connection**
965		Angled seat, DN 20
966		Angled seat, DN 25
970		Angled seat, DN 20, with screwed butt joint
971		Angled seat, DN 25, with screwed butt joint
967		T-piece, DN 32
968		T-piece, DN 40
969		T-piece, DN 50
	(4)	**Material of body**
86		Polyvinylchloride (PVC)

	(1)		(2)		(3)		(4)
Order code		/		-		-	
Order example	202810	/	01	-	970	-	86

Stock versions

(delivery: 3 working days after receipt of order)

Type	Designation	Part no.
202810/01-965-86	Angled seat fitting, DN 20, PVC	00056390
202810/01-966-86	Angled seat fitting, DN 25, PVC	00056389
202810/01-970-86	Angled seat fitting, DN 20, with screwed butt joint, PVC	00416456
202810/01-971-86	Angled seat fitting, DN 25, with screwed butt joint, PVC	00416457
202810/01-967-86	T-piece fitting, DN 32, PVC	00069106
202810/01-968-86	T-piece fitting, DN 40, PVC	00069105
202810/01-969-86	T-piece fitting, DN 50, PVC	00069104

Accessories

(delivery: 3 working days after receipt of order)

Type	Part no.
KCl reservoir for wall mounting, pressure-tight up to 6 bar, to set up an electrolyte bridge, or when using electrodes filled with KCl	00060254

Note:
The type code is a type designation, not a modular system.
If at all possible, please choose the items listed under “Stock items” or “Production items” when ordering.
Any free combination of individual code features must be technically checked by us and released.
Please ask us in case of doubt.