chanhvinh.com

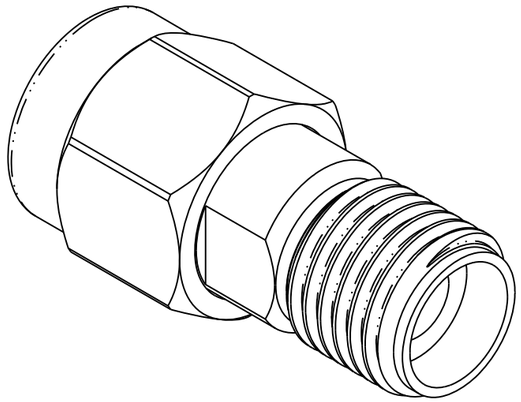

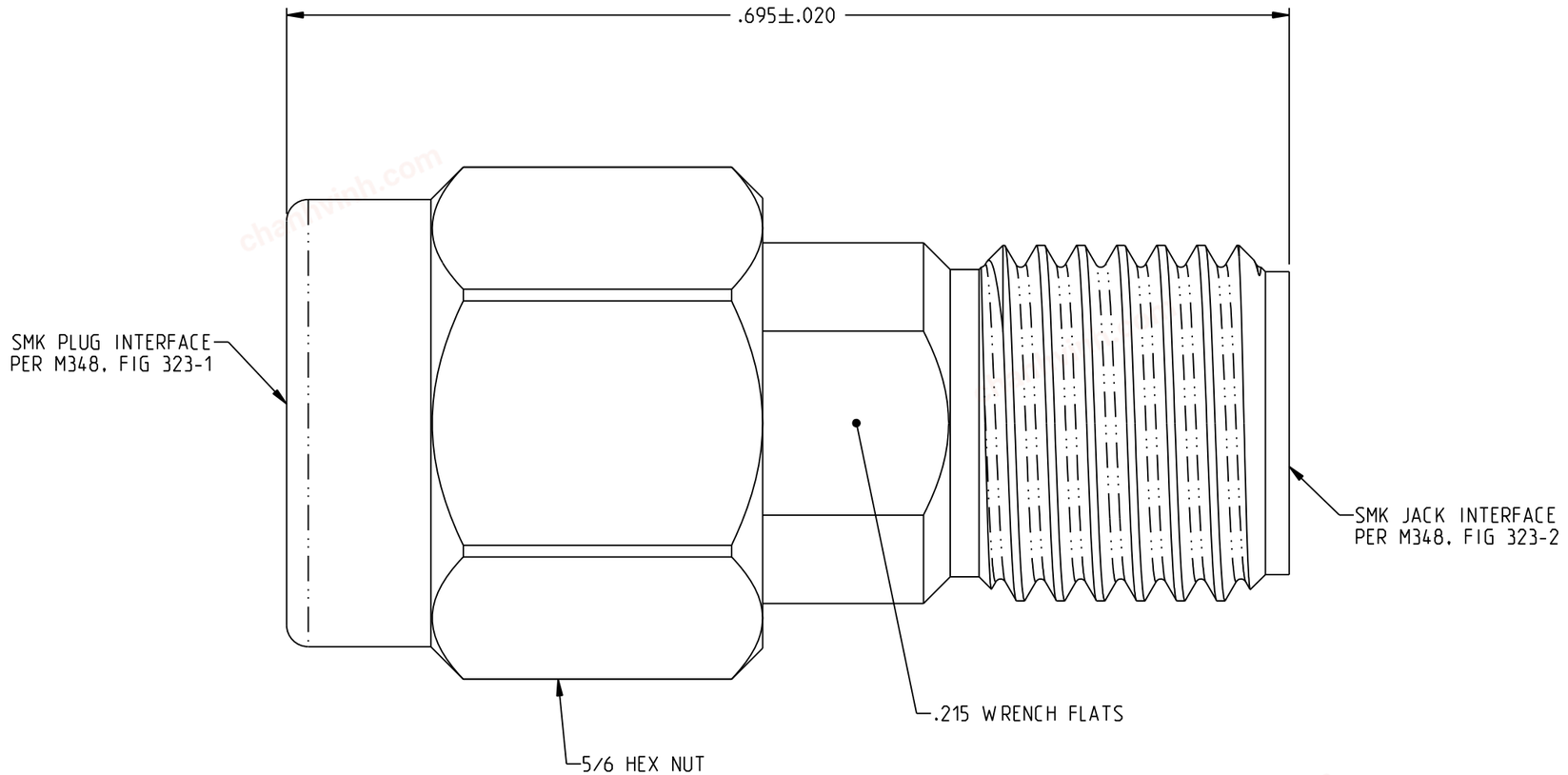

NOTES: UNLESS OTHERWISE SPECIFIED.

1. MATERIAL & FINISH:
   1.1 BODY & COUPLING NUT:
    1.1.1 145-0901-821: GOLD PLATED STAINLESS STEEL
    1.1.2 145-0901-822 PASIVATED STAINLESS STEEL
   1.2 SUPPORT BEAD: PPE (NORYL)
   1.3 CENTER CONTACT: GOLD PLATED BERYLLIUM COPPER
   1.4 GASKET: SILICONE

2. ELECTRICAL:
   2.1 IMPEDANCE: 50 OHMS
   2.2 FREQUENCY RANGE: 0 - 40.0 GHz
   2.3 VSWR: 1.20 MAX
   2.4 WORKING VOLTAGE: 250 VRMS MAX AT SEA LEVEL
   2.5 DIELECTRIC WITHSTANDING VOLTAGE: 500 VRMS MIN AT SEA LEVEL
   2.6 INSULATION RESISTANCE: 5000 MEGOHM MIN
   2.7 CONTACT RESISTANCE:
       CENTER CONTACT - INITIAL 4.0 MILLIOHM MAX, AFTER
                        ENVIRONMENTAL 6.0 MILLIOHM MAX
       OUTER CONDUCTOR - INITIAL 2.0 MILLIOHM MAX
                         AFTER ENVIRONMENTAL NOT APPLICABLE
   2.8 CORONA LEVEL: 150 VOLTS MIN AT 70,000 FEET
   2.9 INSERTION LOSS: .06$\sqrt{F}$ (F IN GHz)
   2.10 RF LEAKAGE: -90 dB MIN AT 2.5 GHz
   2.11 RF HIGH POTENTIAL WITHSTANDING VOLTAGE: 350 VRMS AT 4 AND 7 MHz

cinch CONNECTIVITY SOLUTIONS	3RD ANGLE PROJECTION	JOHNSON
This PROPRIETARY Document is property of Cinch Connectivity Solutions. It is confidential in nature, non-transferable, and issued with the clear understanding that it is no traced or copied without permission and is returnable upon demand. INTERPRET DRAWING IN ACCORDANCE WITH ASME Y14.5-2009.	RoHS2 ☑ 2011/65/EU	Title: ADAPTER ASSY PLUG TO JACK SMK (2.92mm)
	UNLESS OTHERWISE SPECIFIED UNITS: INCH .XX ±.02 .XXX ±.005 ANGLES ±2°	Model No. 145-0901-821/830
		Size B | DO NOT SCALE DRAWING | Date: 3/20/2019 | Sheet 1 OF 1

Please read our datasheet & drawing disclaimer here.